40B

GENERAL INFORMATION
SCHEMATIC DIAGRAM
PARTS LIST

NIKKO

*stereo pre-amp/amprifier model trm-***40B**

NIKKO ELECTRIC MFG. CO., LTD. 4-1, 3-CHOME, TAMAGAWA OKUSAWA-CHO, SETAGAYA-KU, TOKYO, JAPAN.
NIKKO ELECTRIC CORPORATION OF AMERICA 5001 LANKERSHIM BIVD., NORTH HOLLYWOOD, CALIF. 91601

www.hifiengine.com

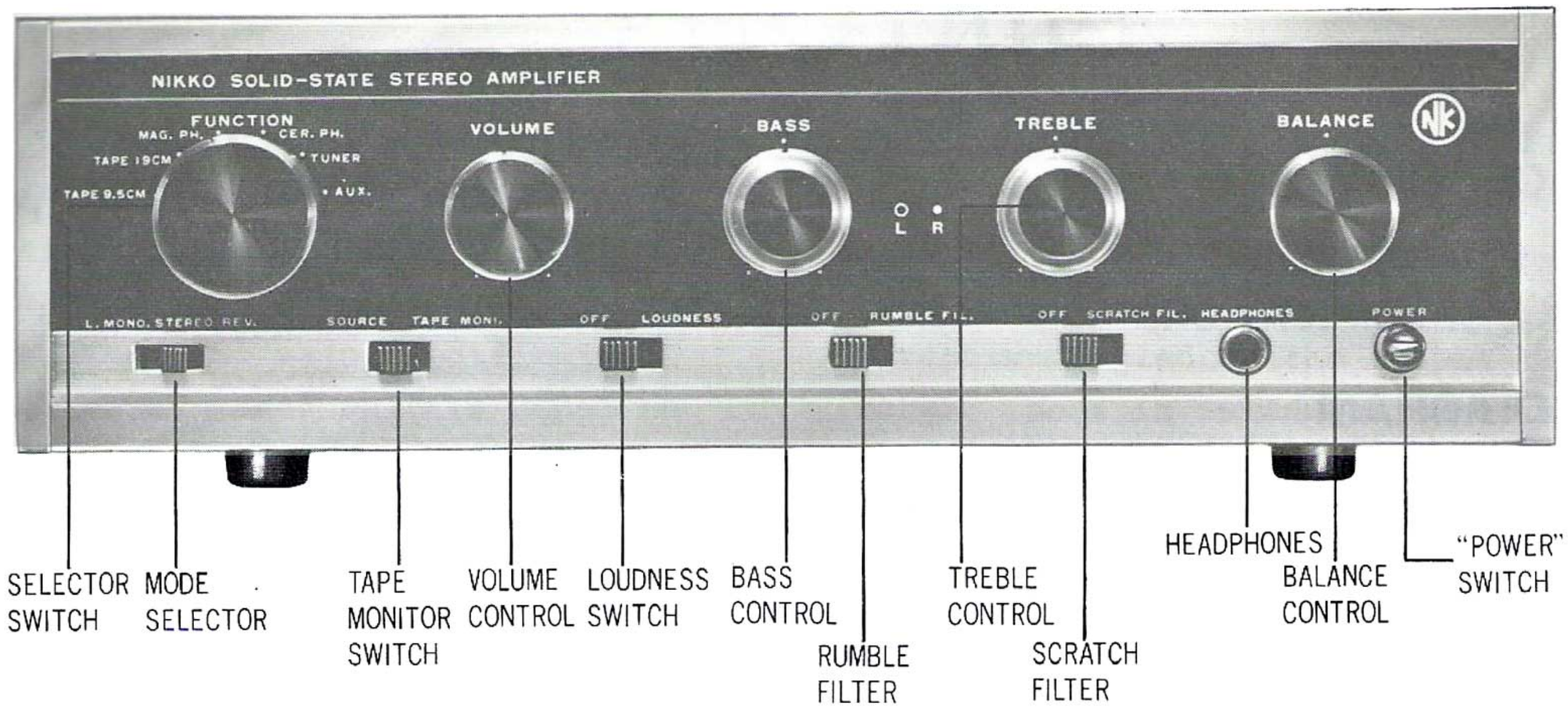

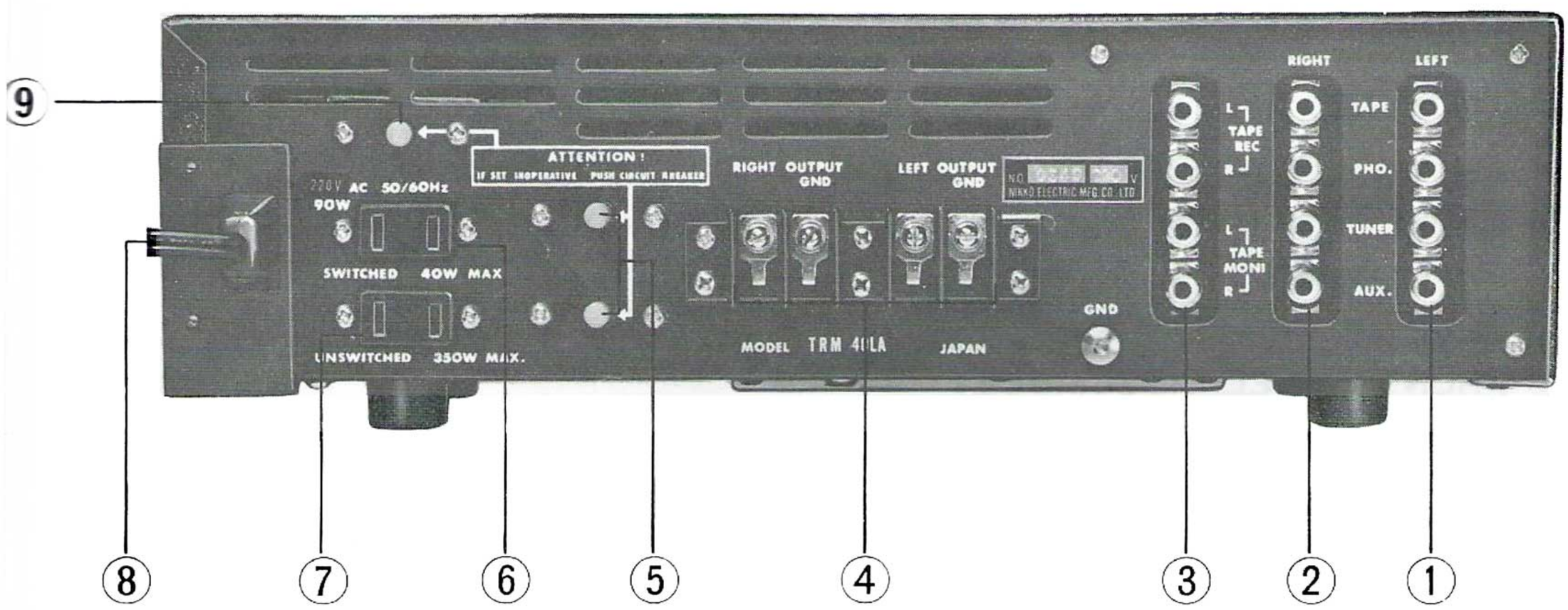

EXPLANATION OF REAR PANEL

1. Input Terminal Board (Left)
   TAPE: Tape Head Input
   PHONO: Phono Input
   TUNER: Tuner Input
   AUX: Auxiliary Input
2. Input Terminal Board (Right)
   Same as left input
3. Tape Monitor Terminal
   TAPE REC.
   For recording direct from tape recorder. Connect tape recorder's jacks to Tape Out, then the program source (radio, Phono, etc.) is recorded on tape.
   TAPE MONITOR
   Plug audio cables in here from play back head available on "Sound on Sound" tape recorder.
4. Speaker Terminal Board
   A. LEFT OUTPUT
   Connection to Left Speaker
   B. RIGHT OUTPUT
   Connection to Right Speaker
   C. GND
   Connection to minus (—) side of both speakers.
5. CIRCUIT BREAKERS
   Protect the secondary circuits from major damage due to overload or short from speaker terminals.
6. AC Outlet (switched)
   This outlet is direct connecting with main power switch. (12
   Maximum Capacity 100 Watts.
7. AC OUTLET (Unswitched)
   This outlet is indirecting with main power switch. (Rather for Tuner)
   Maximum Capacity: 350 Watts.
8. POWER SUPPLY CORD
   To AC Electrical receptacle.
9. CIRCUIT BREAKER
   The primary circuit breaker protects the receiver from major damage due to overload or short amplifier

www.hifiengine.com

CONTENTS

1. GENERAL

PAGE

1.1 GENERAL 4
1.2 SPECIFICATIONS 5

2. DIAGRAM

2.1 DIAGRAM 6
2.2 COMPONENT DIAGRAM 7
2.3 SCHEMATIC DIAGRAM 8
2.4 EQUALIZER CIRCUIT DIAGRAM 9
2.5 AUDIO AMPLIFIER CIRCUIT DIAGRAM 10
2.6 AUDIO AMLIFIER PRINTD CIRCUIT BOARD 11
2.7 PIN TERMINAL CIRCUIT DIAGRAM 12
2.8 TRANSISTOR AND COMPLEMENT 13

3. PARTS LIST

3.1 AMP P.C.B ASSEMBLEY 14
3.2 EQUALIZER P.C.B ASSEMBLEY 14
3.3 PIN TERMINAL ASSEMBLEY 14
3.4 CHASSIS ASSEMBLEY 15
3.5 FRONT PANEL ASSEMBLEY 15
3.6 FINAL ASSEMBLEY 15

4. SERVICE TOOL 16

www.hifiengine.com

1. GENERAL

1.1 GENERAL

The TRM 40 is a Solid State Pre-Amp/Amplifier and was first introduced on the market in April of 1963. Although many improvements have been incorporated since then, no major modification has been made. Because this model became very popular, it has been produced in a large quantity. The output power of this model is 44 watts. (IHF Music Power at 8 ohms.)

Chassis Construction: An aluminum chassis is used to mount the component parts and at the same time function as a heatsink.

Audio Section: Low noise germanium transistors are being used in the pre-amplifier, tone control, and the driver stage. The driver transformers used are bi-filler wound on a high quality iron core. These have been used to eliminate the dropping or falling off of high and low frequencies associated with other types of transformers. These specially wound transformers almost give the effect of a direct coupled circuit along with push-pull balancing of the signal at any condition while limiting it from over driving the power transistors. This section uses one compact circuit board with all parts mounted on it.

Power Output Section: Germanium alloy junction type transistors are being used for the output power stage. Even though the cut-off frequency is low, these transistors are excellent in the audio frequency range and most efficient in a push-pull type circuit. This output stage has its B plus and B minus voltage symmetrically balanced between the power transistors and earth ground so that the speakers used can be directly coupled to the output transistors. There is no capacitor in series with the speakers as this not only cuts off a D. C. current but limits the low frequency characteristics and also causes a phase shift of the signal, thus causing a distorted output.

Circuit Breakers: There are three circuit breakers used in the amplifier. The primary circuit breaker trips when the trouble occurs within the amplifier and protects the power transformer, rectifier, and all major component parts. The secondary circuit breakers will trip if a short circuit of a speaker occurs. This is due to the breakers being in series with the speakers. The breakers used have been developed by Nikko to respond quickly to current overload condition. Their characteristics are similar to a quick action fuse. However, they are more convenient because they can be reset and need not be replaced like a fuse. See figure number 1 for characteristics.

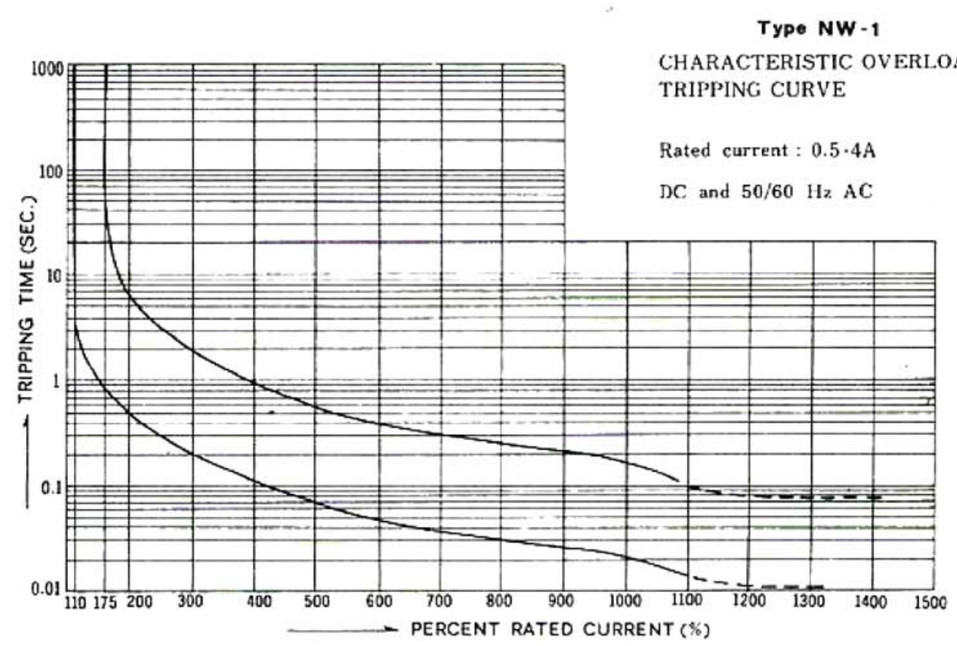

Fig. 1

www.hifiengine.com

1.2 TRM 40B STANDARD SPECIFICATIONS

This standard specification is a guide line whether the unit is good or not. When you repair the unit and if the specifications undermentioned would be satisfied, the said unit suppose to be in good condition.

		Nominal	Limit
1. Input Sensitivity (for Rated Output) (3-3/4"9.5cm)	Magnetic Phono	2.7mV	±3dB
	Ceramic Phono	160mV	±3dB
	Tape Head	1.8mV	±3dB
(7-1/2" 19cm)	Tape Head	1.8mV	±3dB
	AUX.	170mV	±3dB
2. Gain Unbalance (at Tape Monitor)			±2dB
3. Output			
Continuous Power (Single Channel Driven) (at 8ohm Load 1.0% Distortion)		14W	
Harmonic Distortion (at 10W Output)		1.0%	
Recording Output		150mV	±3dB
4. Frequency Responce (-10dB Rated Output) 20Hz to 20KHz			±2dB
5. Noise Level (Volume Control Minimum)		1mV	3mV
6. Control			
Bass Control at 70Hz		+14dB -10dB	±3dB
Trable Control at 10KHz		±14dB	±3dB
7. Loudness Control at 70Hz		+11dB	±3dB
at 10KHz		+7dB	±3dB
8. Rumble Filter at 70Hz		-10dB	±3dB
Scratch Filter at 10KHz		-9dB	±3dB
9. Equalizer			
Tape Head	70Hz	2dB	±2dB
(NAB)	10KHz	-11dB	±2dB
Phono	70Hz	+16dB	±2dB
(RIAA)	10KHz	-15dB	±2dB

www.hifiengine.com

2. DIAGRAM

2.1 TRM 40B DISASSEMBLY PROCEDURE

REMOVING THE FRONT PANEL BONNET AND BOTTOM PLATE

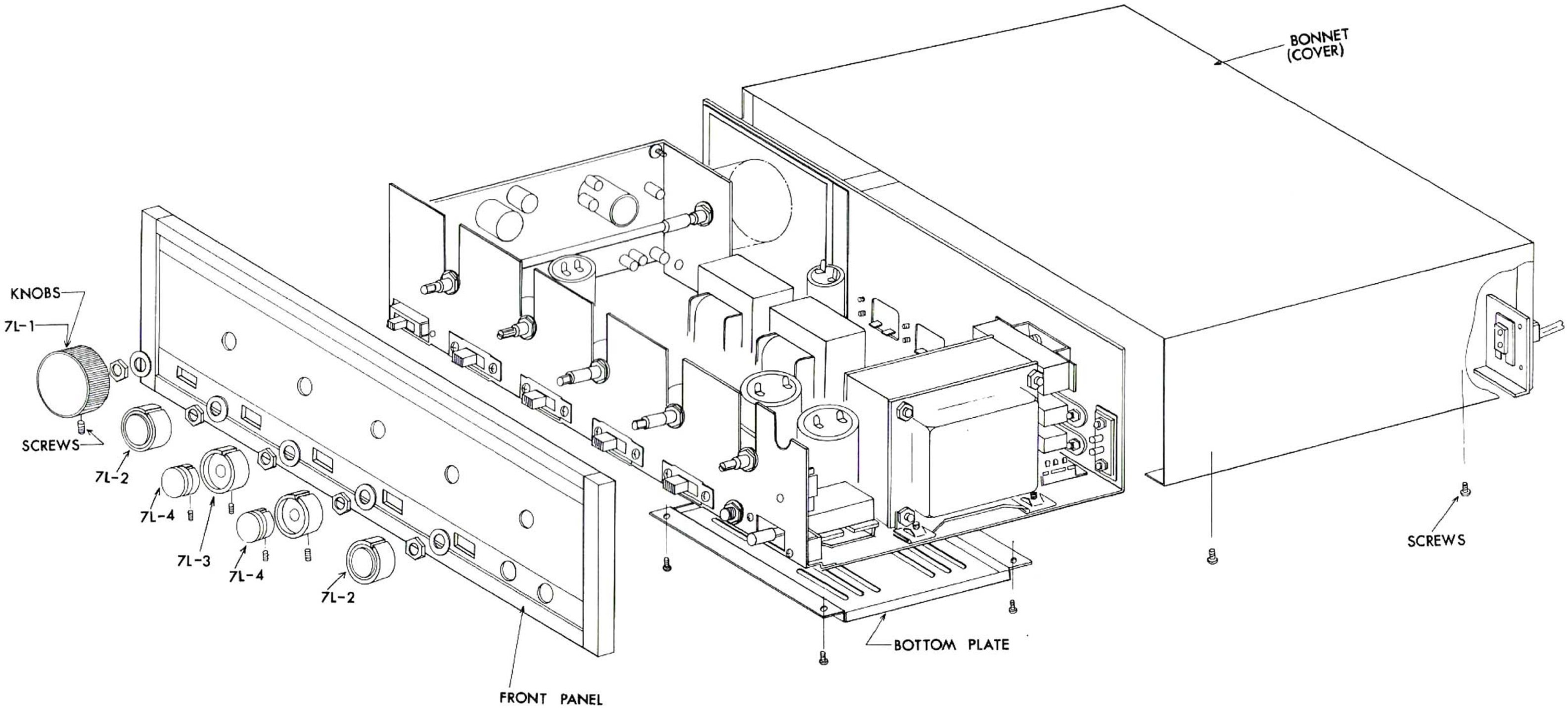

www.hifiengine.com

2.2 COMPONENT DIAGRAM

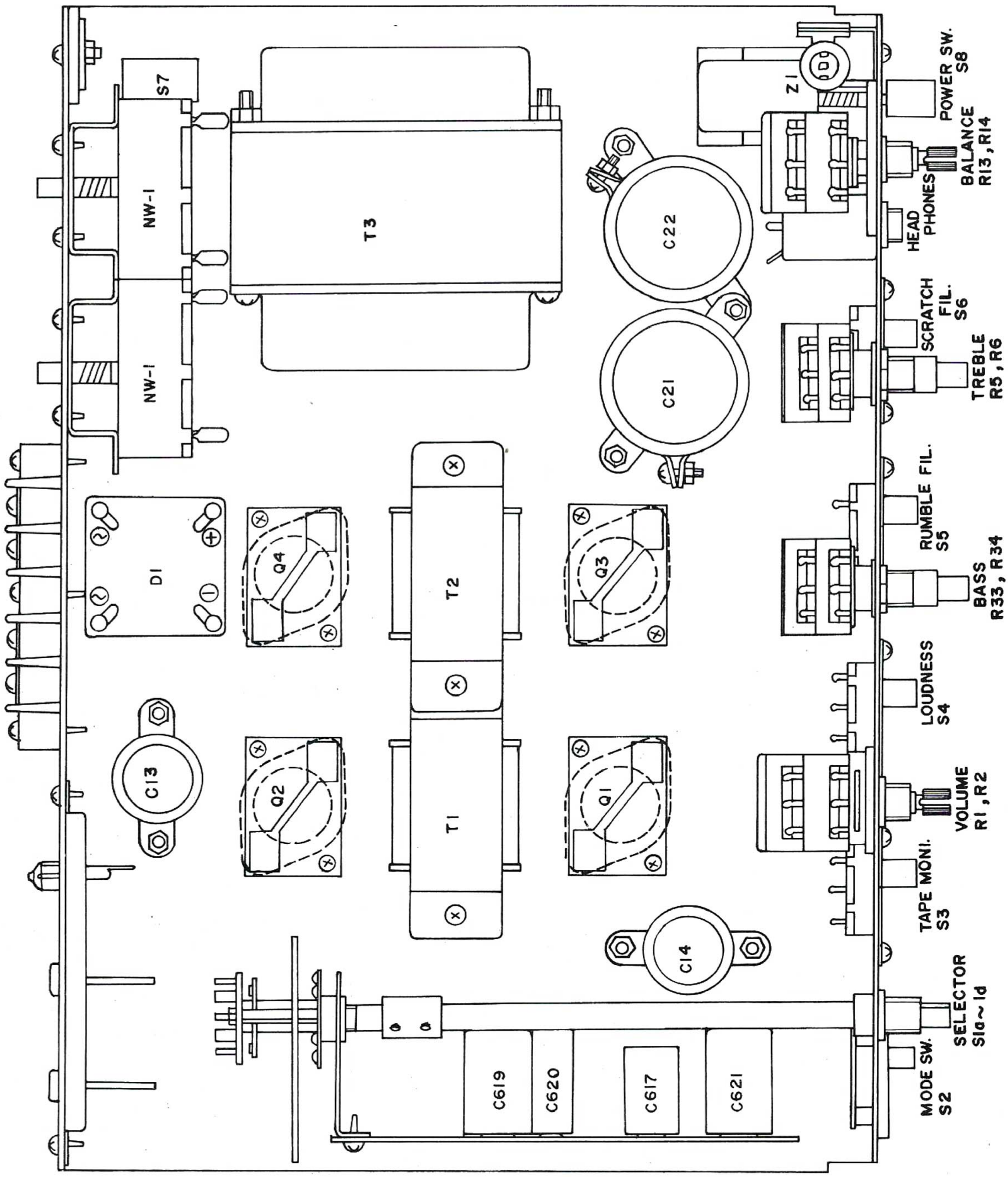

TOP VIEW

www.hifiengine.com

2.3 SCHEMATIC DIAGRAM

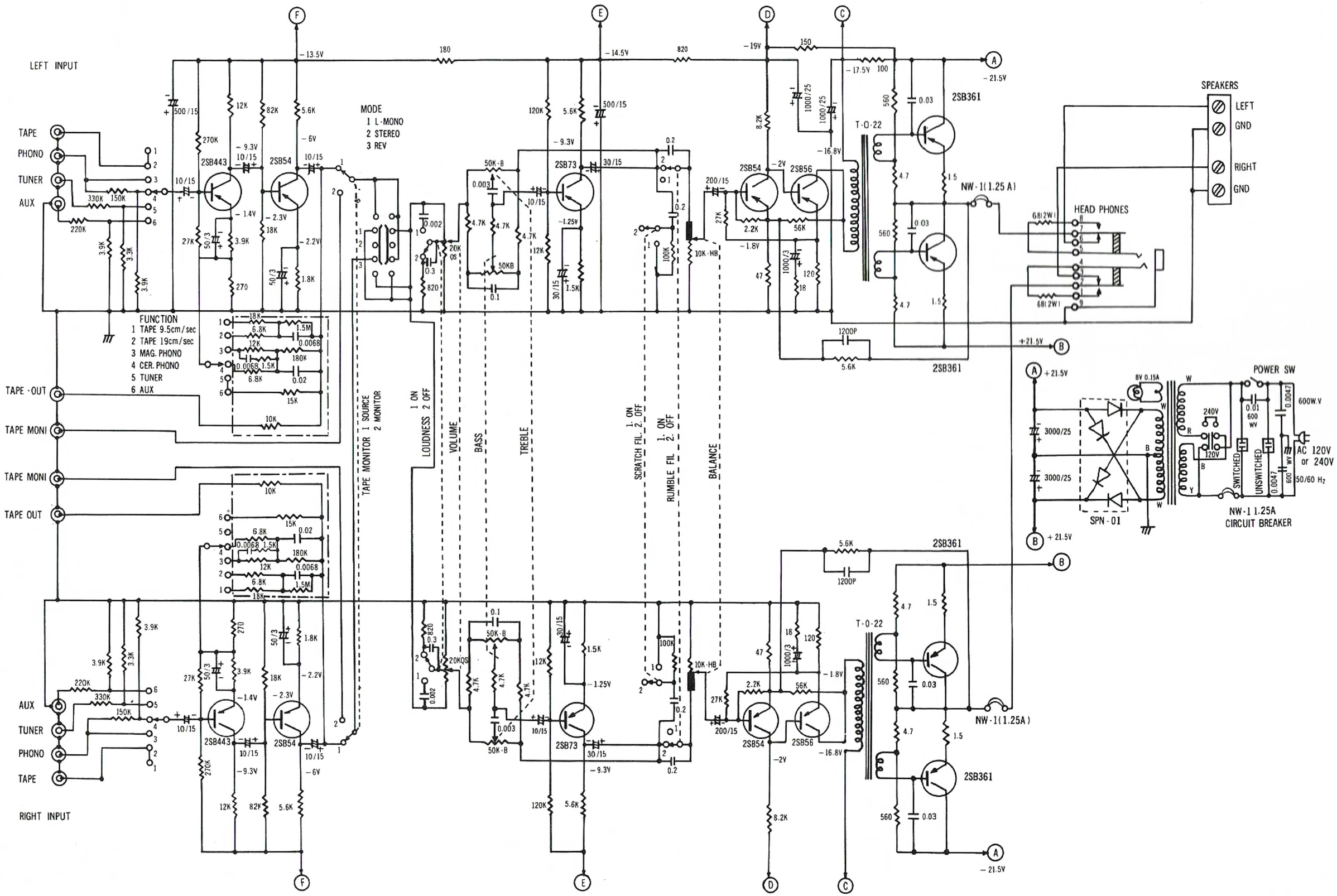

2.4 EQUALIZER CIRCUIT DIAGRAM

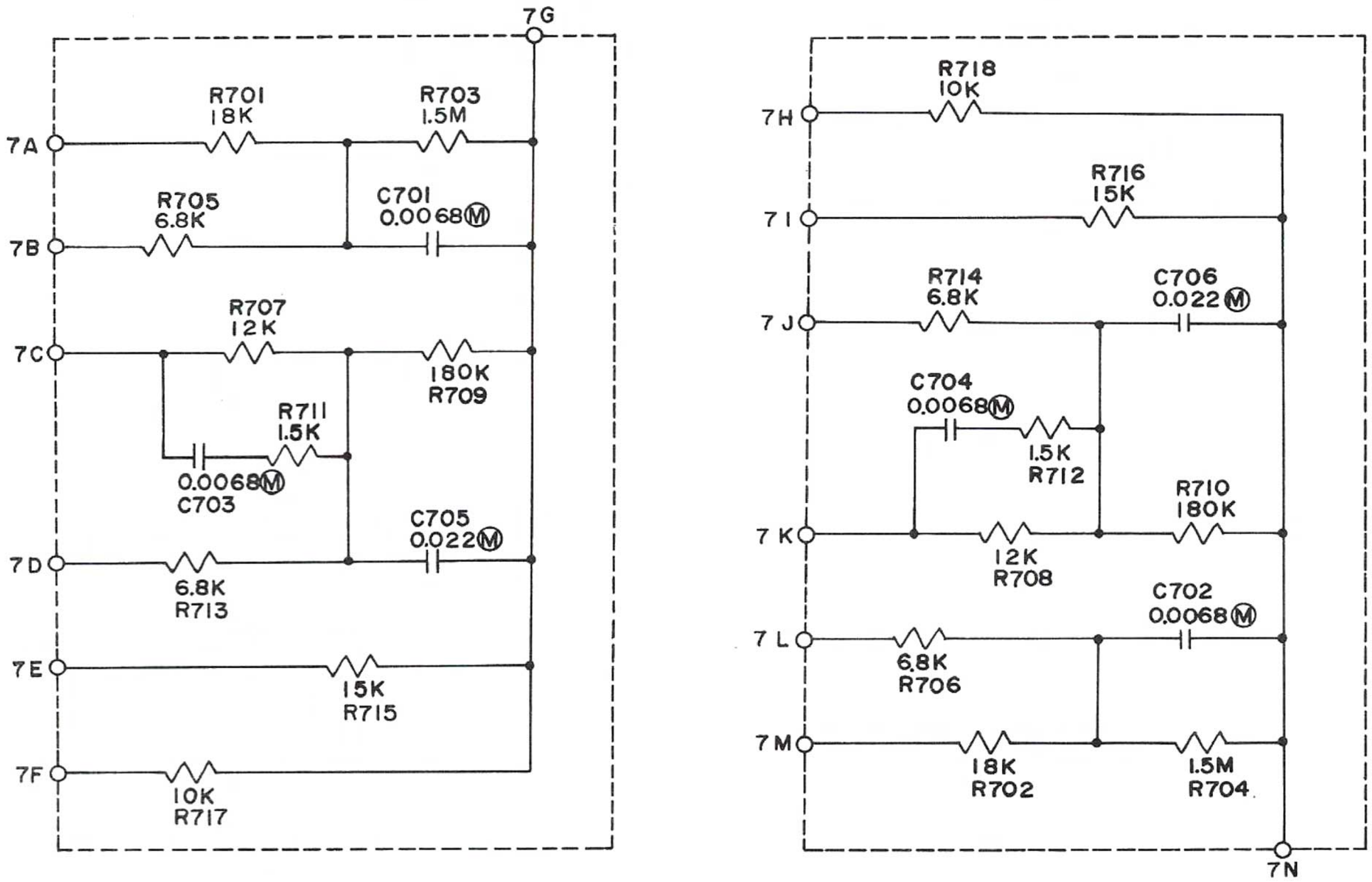

EQUALIZER PRINTED CIRCUIT BOARD

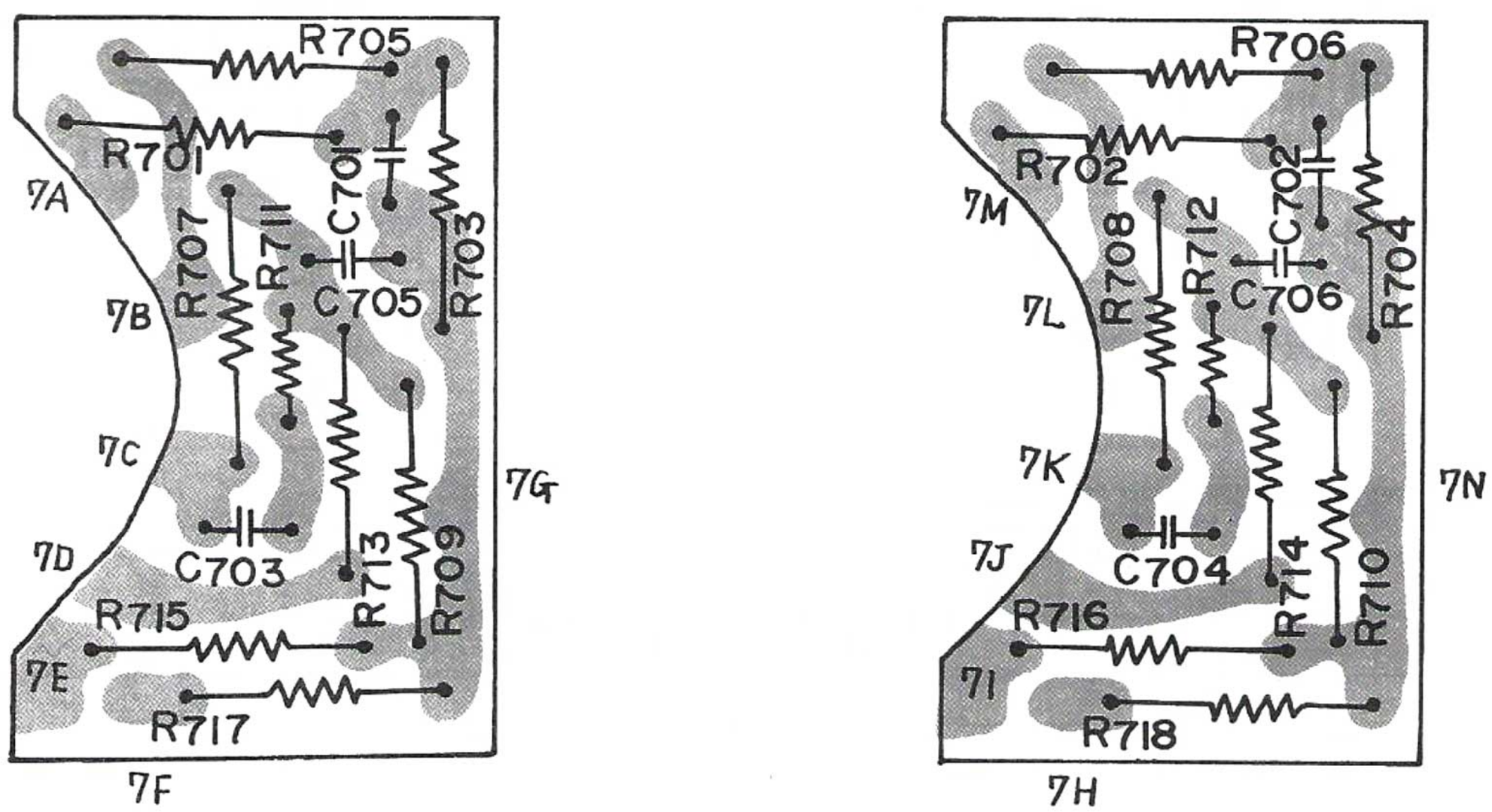

TOP VIEW

www.hifiengine.com

2.5 AUDIO AMPLIFIER CIRCUIT DIAGRAM

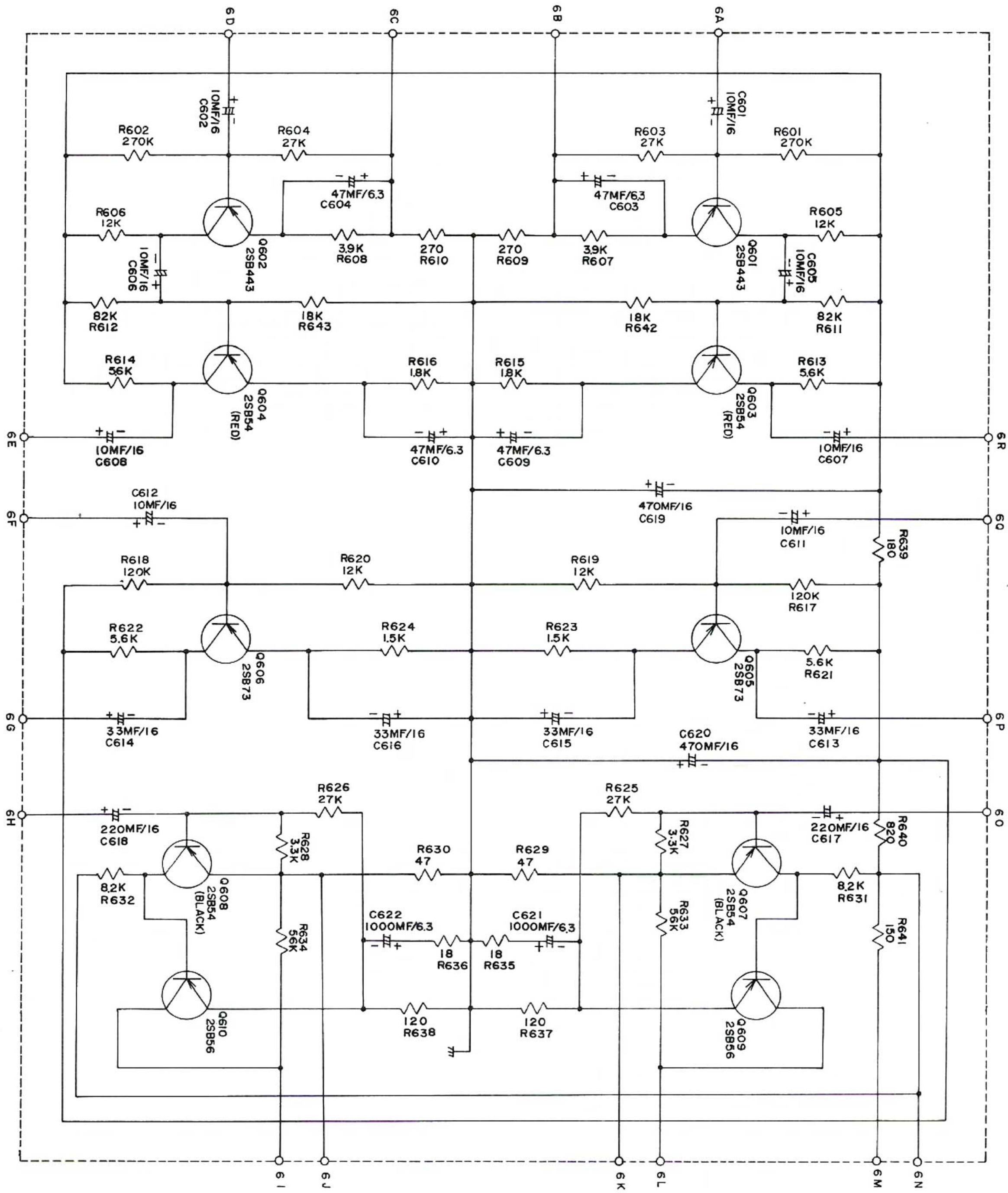

www.hifiengine.com

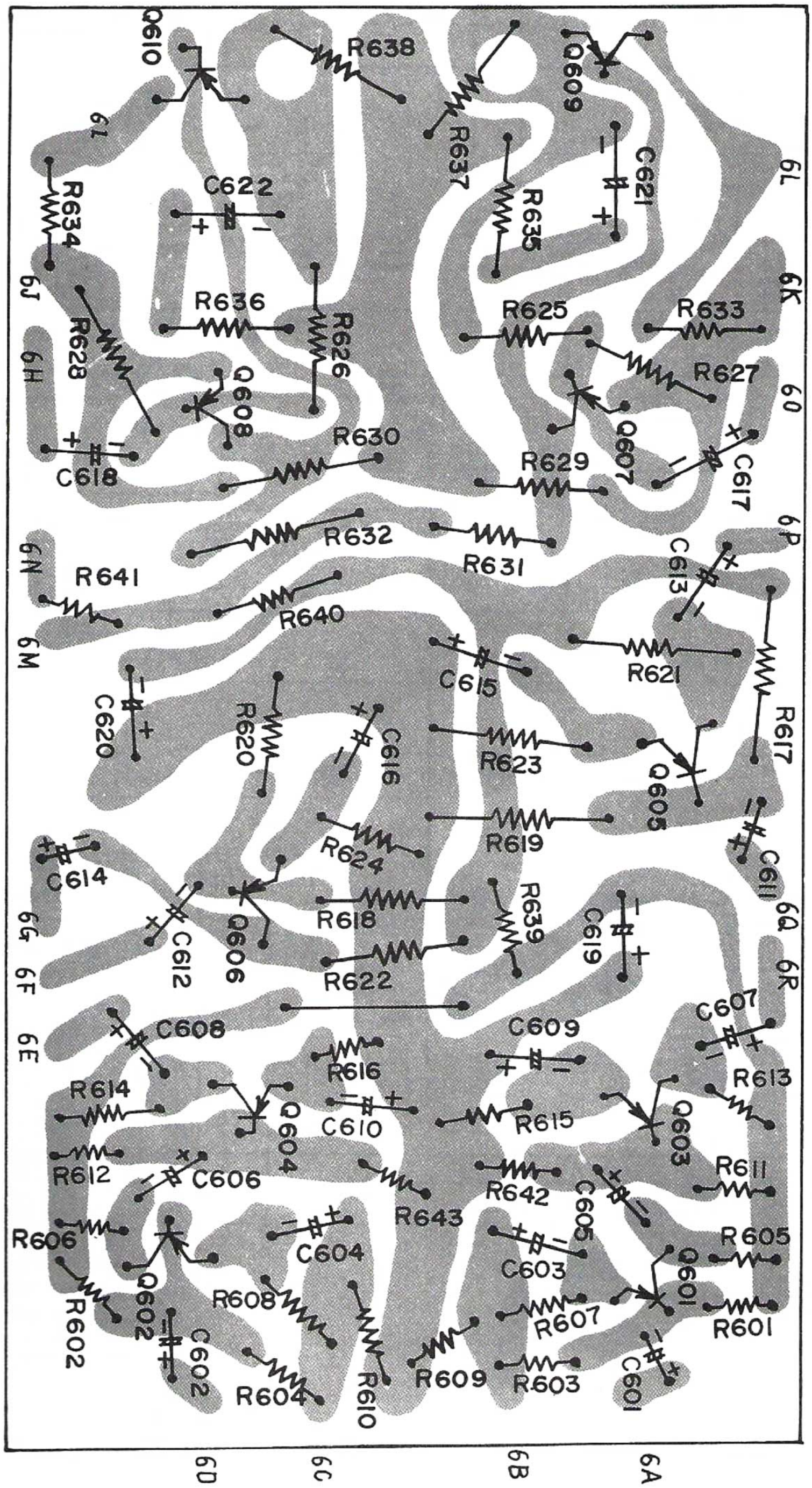

TOP VIEW

www.hifiengine.com

2.6 PIN TERMINAL CIRCUIT DIAGRAM

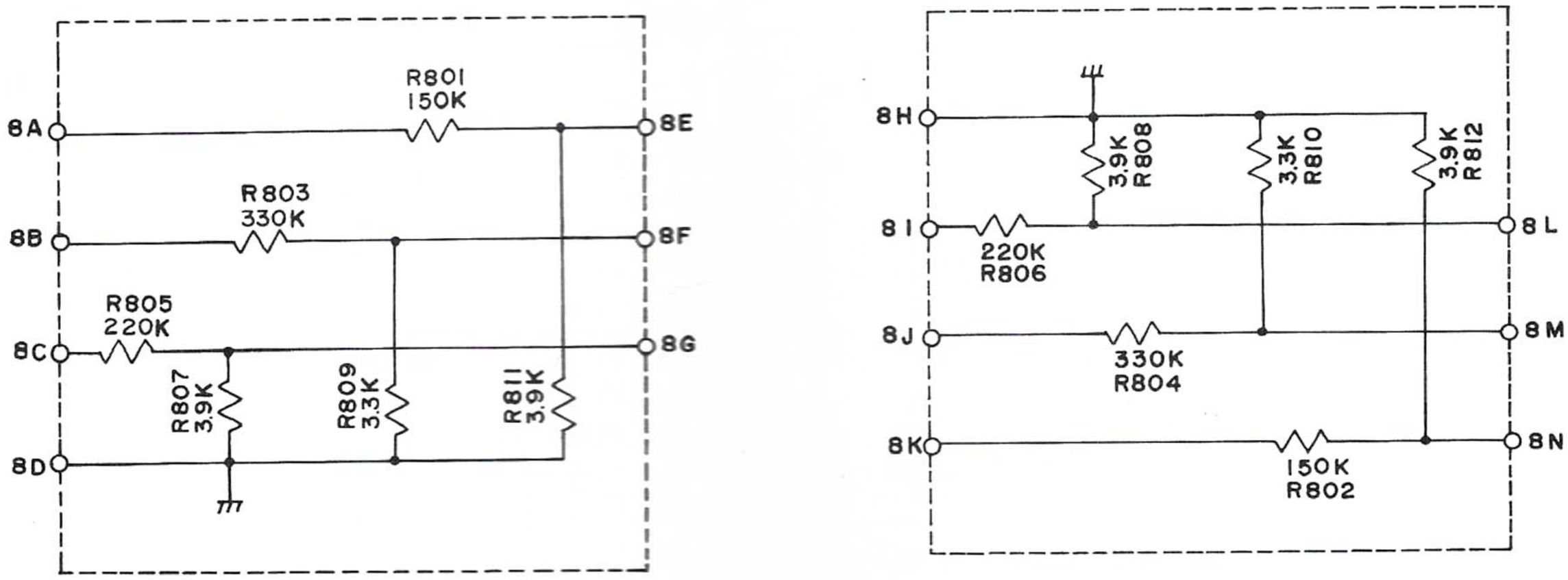

PIN TERMINAL PRINTED CIRCUIT BOARD

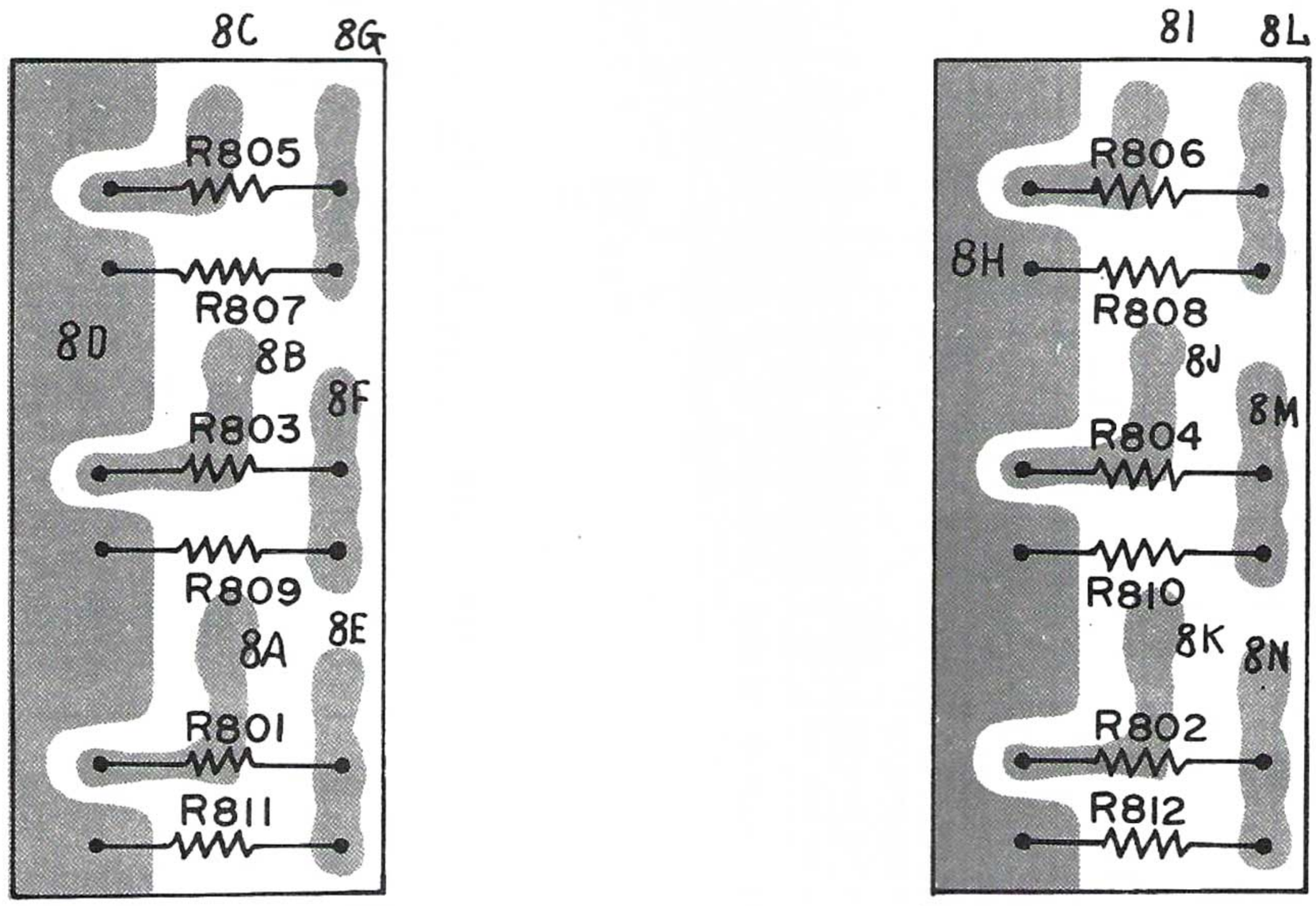

TOP VIEW

www.hifiengine.com

2.8 TRANSISTOR AND COMPLEMENT

TRANSISTOR COMPLEMENT

TYPE	DESCRIPTION	CLASS OF SERVICE	Maximum Ratings (Ta = 25°C) (Absolute Values)						Electrical characteristics (Typical Value) (Ta = 25°C)											※ Manufacture Name	
			Collector to Base Voltage V_{CBO}(V)	Emitter to Base Voltage V_{EBO}(V)	Collector Current I_C(mA)	Emitter Current I_E(mA)	Collector Dissipation PC(mw)	Junction temperature Tj °C	Condition of Measurement V_{CE} (V)	Condition of Measurement I_E (MA)	hfe (hFE)	NF dB	fαb (fT) MHz	cob PF	hie (real) Ω	Collector Cut-off Current I_{CBO} (max μA)	Collector Cut-off Current @V_{CB} V	Emitter Cut-off Current I_{EBO} (max μA)	Emitter Cut-off Current @V_{EB} V		
2SB54	*PNP Ge Alloyed*	Small Signal Amp/Driver	−30	−12	−150	150	150	75	−6	1	140	10	1	35	–	−14	−30	–	−12	Ⓣ	
2SB56	*PNP Alloyed*	Small Signal Amp.	−30	−12	−150	150	150	75	−1	−50(Ic)	80	–	1	35	120	−14	−30	14	12	Ⓣ	
2SB73	*PNP Ge Alloyed*	Low Noise Small Signal Amp.	−10	−10	−2	2	20	85	−4	0.5	65	6	–	–	–	−7	−10	−7	−10	Ⓗ	
2SB75	*PNP Ge Alloyed*	Small Signal Amp Driver	−25	−12	−100	100	150	85	−6	1	55	7	2	–	–	−14	−25	−12	−12	Ⓗ	
2SB77	*PNP Ge Alloyed*	Small Signal Amp.	−25	−12	−100	100	150	85	−1.5	50	85	–	2	–	–	−12	−25	−12	−12	Ⓗ	
2SB328	*PNP Ge Alloyed*	Audio Driver Medium	−25	−10	−200	−200	150	85	−1.0	−20	70	6	2	–	–	−10	−15	–	–	Ⓝ	
2SB337	*PNP Ge Alloyed*	Hi-Fi Power Amp.	−40	−10	−7A	7A	30W	100	−4	1A	90	–	300KHz	–	–	−1.5mA	−30	−2mA	−10	Ⓗ	
2SB361	*PNP Ge Drift*	Hi-Fi Power Amp.	−80	−1	−5A	5A	12W	100	−2	1	85-230	–	5	–	–	−500	−40	−100	1.0	Ⓗ	
2SB443	*PNP Ge Alloyed*	Low Noise Small Signal Amp.	−18	−12	−10	10	100	100	−6	1	150	4	3	–	110	−10	−12	−10	−12	Ⓗ	
2SB302	*PNP Ge Alloyed*	Low Noise Small Signal Amp.	−10	−10	−15	15	80	85	−6	1	150	4	50	15	10	4	−12	6	−12	Ⓗ	
2SB303	*PNP Ge Alloyed*	Low Noise Small Signal Amp.	−25	−12	−20	20	100	75	−6	1	180	3.5	50	40	12000	15	15	12	−6	Ⓢ	

※ Ⓗ HITACHI Ⓣ TOSHIBA Ⓢ SANYO Ⓝ NEC Ⓕ FUJITSU

SILICON RECTIFIER COMPLEMENT

Type	Peak Inverse Voltage (V)	AC Input Voltage (V)	Output Current (max mA)	Inverse Current (A/Hz)	Surge Current (A/Hz)	Junction Temperature (°C)	CES Type	
SE-05	400	120	500	10	15	−55～+130	1S1021	Ⓞ
S-2E	200	75	500	35	40	120	1S1221	Ⓢ
SPN-01	100	36	1A	Full Wave Bridge Stack				Ⓞ
SR-1-DM	100	50	1A		50	40～+100		Ⓜ
S-2A-20	200	75	1.5A		80	150	1S921	Ⓢ
S-2A-10	100	75	1.5A		80	15		Ⓢ

Ⓞ ORIGIN
Ⓢ SHINDENGEN
Ⓜ MITSUBISHI

www.hifiengine.com

3. PARTS LIST FOR TRM 40B

3.1 AMP PCB ASSEMBLEY

Parts No.	Description	Symbol	Parts No.	Description	Symbol
461008	PC TRM 40A		1-311563	RES 56K ohm R1/4	R633,634
1-311180	RES 18 ohm R1/4	R635,636	1-311823	RES 82K ohm R1/4	R611,612
1-311470	RES 47 ohm R1/4	R629,630	1-311124	RES 120K ohm R1/4	R617,618
1-311121	RES 120 ohm R1/4	R637,638	1-311274	RES 270K ohm R1/4	R601,602
1-311151	RES 150 ohm R1/4	R641	210108	E-CAP 1000MF/3.15V	C621,632
1-311181	RES 180 ohm R1/4	R639	210476	E-CAP 47MF/3.15V	C603,604,609,
1-311271	RES 270 ohm R1/4	R609,610			610
1-311821	RES 820 ohm R1/4	R640	214106	E-CAP 10MF/16V	C601,602,605,
1-311152	RES 1.5K ohm R1/4	R623,624			606,607,608,611,
1-311182	RES 1.8K ohm R1/4	R615,616			612
1-311332	RES 3.3K ohm R1/4	R627,628	214336	E-CAP 33MF/16V	C613,614,615,
1-311392	RES 3.9K ohm R1/4	R607,608			616
1-311562	RES 5.6K ohm R1/4	R613,614,621,	214227	E-CAP 220MF/16V	C617,618
		622	214477	E-CAP 470MV/16V	C619,620
1-311822	RES 8.2K ohm R1/4	R631,632	510017	TR 25B 443	Q601,602
1-311123	RES 12K ohm R1/4	R605,606,619,	510012	TR 25B 54 (RED)	Q603,604
		620	510027	TR 2SB 54 (BLK)	Q607,608
1-311183	RES 18K ohm R1/4	R642,643	510007	TR 2SB 561 (YEL)	Q609,610
1-311273	RES 27K ohm R1/4	R603,604,625,	510002	TR 2SB 73	Q605,606
		626			

3.2 EQUALIZER PCB ASSEMBLEY

Parts No.	Description	Symbol	Parts No.	Description	Symbol
461079	PC-1079		2-311682	RES 6.8K ohm R1/4	R705,706,713,
2-311155	RES 1.5M ohm R1/4	R703,704			714
2-311184	RES 180K ohm R1/4	R709,710	2-311152	RES 1.5K ohm R1/4	R711,712
2-311183	RES 18K ohm R1/4	R701,702	2-311681	RES 680 ohm R1/4	
2-311153	RES 15K ohm R1/4	R715,716	1-262223	M-CAP 0.022MF	C705,706
2-311123	RES 12K ohm R1/4	R707,708	1-262682	M-CAP 0.0068MF	C701,702,703,
1-311103	RES 10K ohm R1/4	R717,718			704

3.3 PIN TERMINAL ASSEMBLEY

Parts No.	Description	Symbol	Parts No.	Description	Symbol
444041	PIN TER 4P		1-311154	RES 150K ohm R1/4	R801,802
461067	PC 461067		1-311224	RES 220K ohm R1/4	R805,806
1-311332	RES 3.3K ohm R1/4	R809,810	1-311334	RES 330K ohm R1/4	R803,804
1-311392	RES 3.9K ohm R1/4	R807,808,811,	272101	C-CAP 100PF	C801,802
		812			

www.hifiengine.com

3.4 CHASSIS ASSEMBLEY

Parts No.	Description	Symbol	Parts No.	Description	Symbol
712042	SHFT		206108	E-CAP 1000MF/25V	C13,14
402027	SLD SW SL-13		262122	M-CAP 0.0012MF	C15,16
450006	UL SKT (B)		262333	M-CAP 0.033MF	C17,18,19,20
790167	POLLY FOOT		297472	O-CAP 0.0047MF	C24,25
110007	T-1-7	T3	297103	O-CAP 0.01MF	C23
101006	T-0-7	T1,2	1-311398	RES 3.9 ohm R1/4	R21,22,23,24
405030	ROTRY 2-4-6		1-311101	RES 100 ohm R1/4	R32
490017	NW-1 1.25A		1-311562	RES 5.6K ohm R1/4	R15,16
512201	TR 2SB 337	Q1,2,3,4	333158	W-RES 1.5 ohm R1/4	R25,26,27,28
501032	D SPN-01	D1	1-344561	M-RES 560 ohm R1/4	R17,18,19,20
206338	E-CAP 3300MF/25V	C21,22			

3.5 FRONT PANEL ASSEMBLEY

Parts No.	Description	Symbol	Parts No.	Description	Symbol
702116	FRONT PLT		1-311472	RES 4.7K ohm R1/4	R3,4,7,8,9,10
716064	SLEEVE		1-311104	RES 100K ohm R1/4	R11,12
790152	PUSH BUTTON (B)		374151	M-MES 150 ohm R1/4	R29,30
432007	UR 20KA X 2CT		262222	M-CAP 0.0022MF	C1,2
433001	UR 50KA X 2		262332	M-CAP 0.0033MF	C5,6
432009	UR 10K HB X 2		262104	M-CAP 0.1MF	C7,8
455001	EAR JACK		262224	M-CAP 0.22MF	C11,12
580004	PL-4	Z1	262334	M-CAP 0.33MF	C3,4,9,10
1-311821	RES 820 ohm R1/4	R31,35	402017	SLD SW SL-83	

3.6 FINAL ASSEMBLEY

Parts No.	Description	Symbol	Parts No.	Description	Symbol
718021	KNOB 7L-1		702281	COV	
718022	KNOB 7L-2		880178	STYROL BOX (COV)	
718023	KNOB 7L-3		880177	STYROL BOX (BTM)	
718024	KNOB 7L-4		880260	CARTON BOX	
772001	COV SASS				

www.hifiengine.com

4. SERVICE TOOL

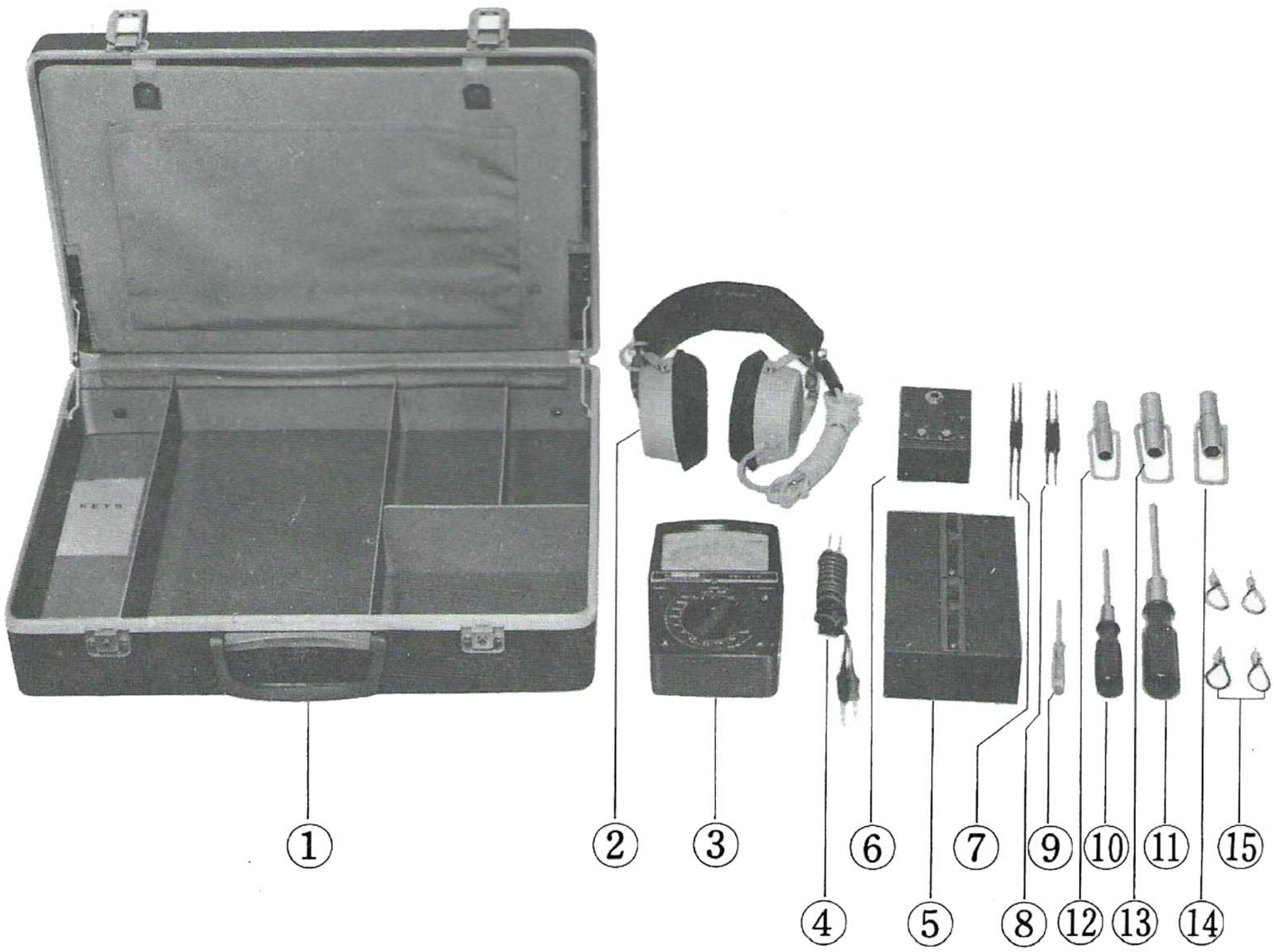

1	TOOL BOX	1
2	HEAD PHONES	1
3	CIRCUIT TESTER	1
4	TEST LEADES	2
5	DUMMY LOAD BOX	1
6	HEAEPHONE CONVERTER	1
7	ALIGNMENT TOOL(M. P. X)	2
8	ALIGNMENT TOOL(FRONT. END)	2
9	TINY SCREW DRIVER	1
10	SMALL SIZE CROSS SCREW DRIVER	1
11	MEDIAM SIZE CROSS SCREW DRIVER	1
12	VOLUME WRENCH (8— 10)	1
13	VOLUME WRENCH (11— 12)	1
14	VOLUME WRENCH (13— 14)	1
15	SHORTED PIN JACK	4

www.hifiengine.com