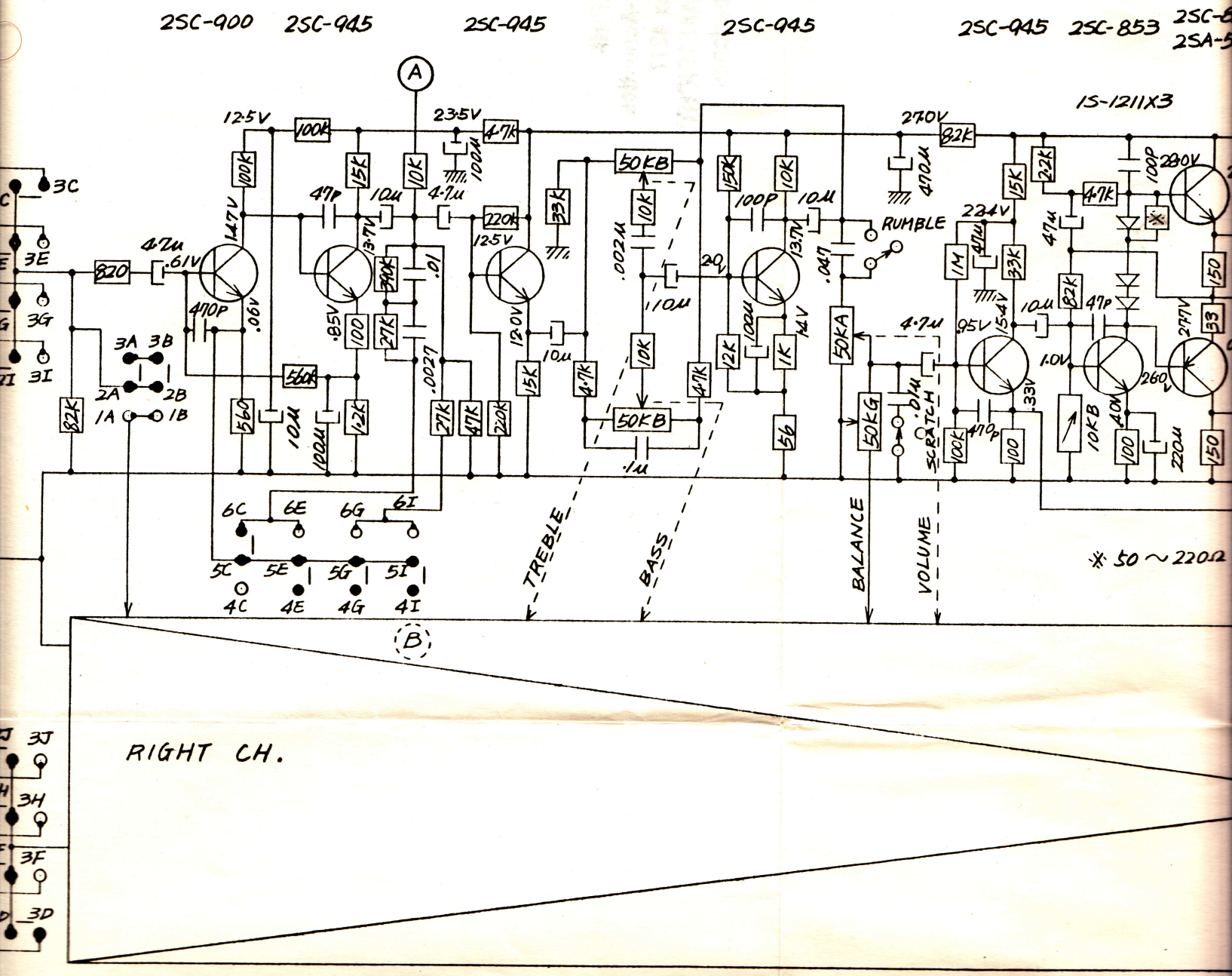
2SC-900
2SC-945
2SC-945
2SC-945
2SC-945
2SC-853
1S-1211X3
A
B
RUMBLE
SCRATCH
TREBLE
BASS
BALANCE
VOLUME
※ 50 ~ 220Ω
RIGHT CH.
3A 3B
2A 2B
1A 1B
6C 6E 6G 6I
5C 5E 5G 5I
4C 4E 4G 4I
3C
3E
3G
3I
3J
3H
3F
3D

NEC - ROELOFS

2SC-853 2SD-154
2SA-545 2SD-154

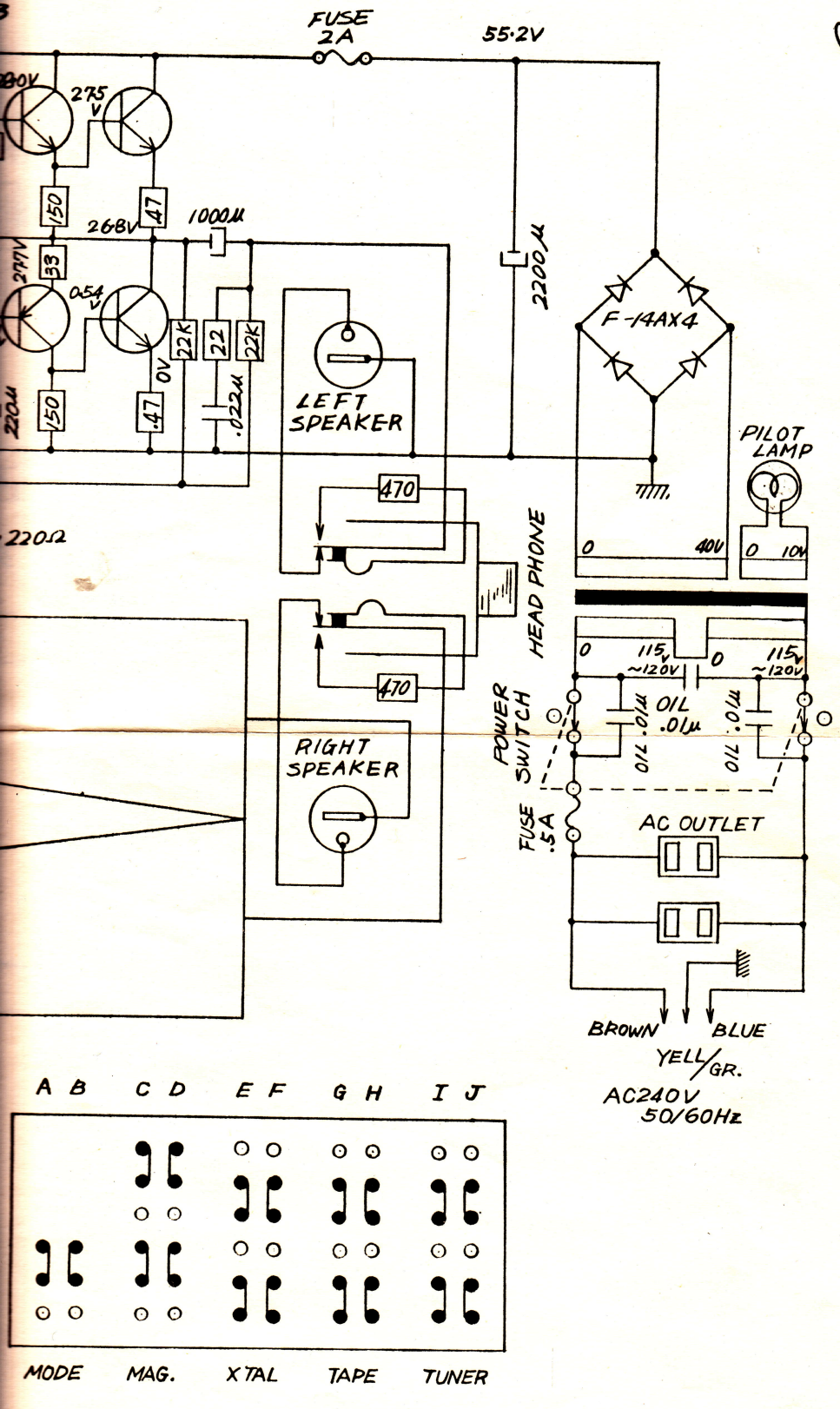

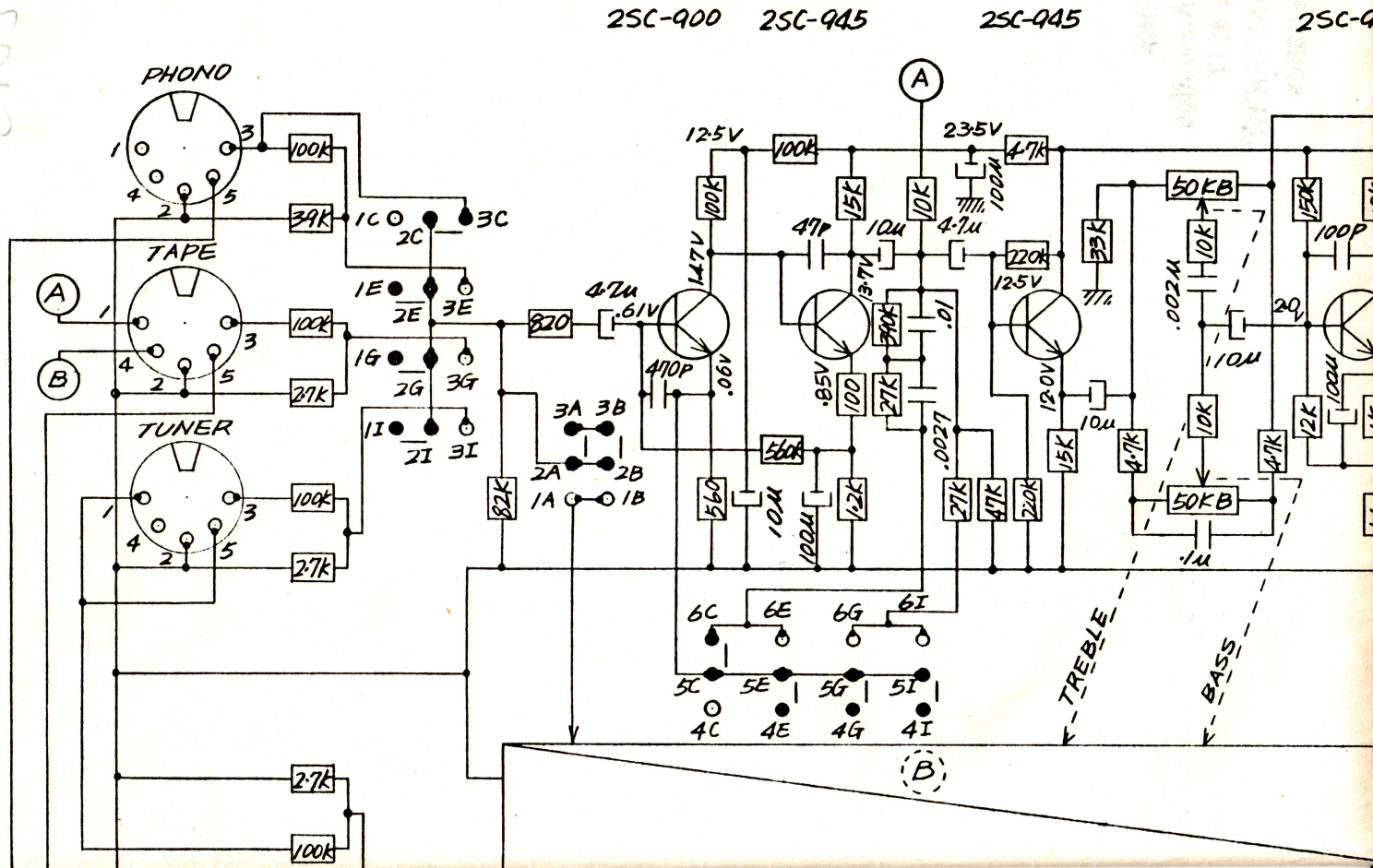
2SC-900
2SC-945
2SC-945
PHONO
TAPE
TUNER
A
B
100k
39k
2.7k
1C
2C
3C
1E
2E
3E
1G
2G
3G
1I
2I
3I
820
4.7u
.61V
1.47V
.06V
470P
12.5V
100k
560k
560
10u
100u
1.2k
47P
15k
10u
13.7V
390k
.01
.85V
100
27k
.0027
10k
4.7u
23.5V
100u
4.7k
220k
12.5V
12.0V
33k
10u
15k
4.7k
50KB
10k
.002u
10u
10k
50KB
.1u
4.7k
150k
100P
2.0V
12k
100u
3A
3B
2A
2B
1A
1B
82k
6C
6E
6G
6I
5C
5E
5G
5I
4C
4E
4G
4I
TREBLE
BASS

NEC - ROELOFS

2SC-945 2SC-853 2SC-853 2SD-154
2SA-545 2SD-154

IS-1211X3