SERVICE MANUAL

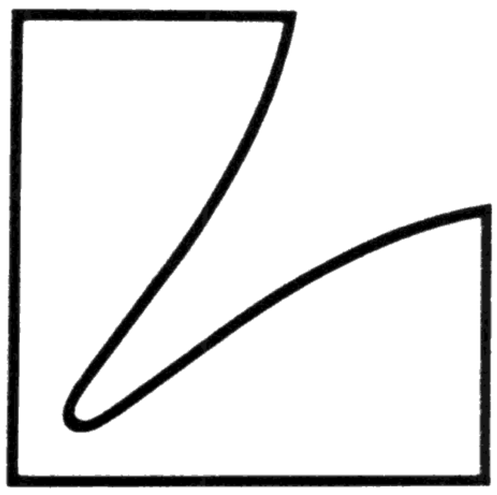

REALTIME PROCCESSED DC STEREO TUNER-AMPLIFIER R-1120A

www.hifiengine.com

R-1120A AM/FM Alignment Procedures

This unit was already aligned at the factory prior to shipment but in case that re-alignment is necessary for any reasons such as replacement of the front-end, etc., please align in accordance with the following procedures:

[1] AM IF Adjustment

(1) Set the function switch at AM mode.
(2) Confirm that the 815 terminal on the PB-1267 is at +13±1V.
(3) Connect AM 455KHz output from an IF sweep generator to the 830 terminal on the PB-1267.
(4) Connect input of the AM IF sweep generator to the 854 terminal on the PB-1267.
(5) Make output of the sweep generator about 50dB, sweep speed 3Hz.
(6) Adjust the T804 and T805 to make the output maximum with the IF wave symmetrical on left and right.

[2] AM Tracking adjustment

(1) Connect an A.C. volt meter and an oscilloscope to the REC OUT of the R-1120A.
(2) Set the center of the loop antenna of an AM signal generator about 50cm away from the bar antenna of the R-1120A.
(3) Make output of the AM signal generator about 60dB, 600Hz.
(4) Set the dial pointer at 600KHz on the dial scale by the tuning knob of this unit.
(5) Adjust the local oscillator coil T803 and also the core position of the bar antenna for sensitivity adjustment to make REC OUT output maximum.
(6) Make output of the AM signal generator about 60dB, 1400KHz.
(7) Set the dial pointer at 1400KHz on the dial scale by the tuning knob.
(8) Adjust the local oscillator trimmer capacitor TC802 and the trimmer capacitor TC801 for sensitivity adjustment to make REC OUT output maximum.
(9) Repeat adjustment as per the foregoing steps 3-8 for a few times to make each sensitivity maximum at the tracking point between 600KHz and 1400KHz.

[3] AM Signal Meter Adjustment

(1) Make output of the AM signal generator 126dB, 1000KHz.
(2) Make this machine receive the foregoing 1000KHz.
(3) Adjust the VR807 to make the signal meter swing 4.5.

[4] FM IF Adjustment

(1) Set the switches of the R-1120A as follows:

Function Switch	: FM
Acculock Switch	: Off
IF Switch	: Wide
ATT Switch (Rear Panel)	: Off

(2) Connect the center meter in between the 835 and 836 terminals on the PB-1267.
(3) Connect an FM signal generator to the terminal of the FM antenna.
(4) Set the dial pointer at around 98MHz where no station is available.
(5) Make output of the FM signal generator minimal.
(6) Make output of the FM signal generator 1mV, modulation 1KHz and 100% monaural.
(7) Tune this unit at ±0 on the center meter with the signal specified in the foregoing step 7.
(8) Adjust the T802 to make distortion minimal.
(9) Repeat adjustment as per the forgoing steps 5-9 for few times.

[5] FM Tracking Adjustment

(1) Make output of the FM signal generator 2μV, 106MHz, modulation 1KHz 100%.
(2) Set the dial pointer at 106MHz on the dial scale by the tuning knob of this unit.
(3) Adjust the trimmer capacitor TC803, TC804 and TC805 for sensitivity adjustment and the local oscillator trimmer capacitor TC806 to make REC OUT output maximum.
(4) Make output of the FM signal generator 2μV, 98MHz, modulation 1KHz 100%.
(5) Make this unit receive the signal specified in the foregoing step 4 and confirm the dial pointer read 98MHz on the dial scale.

Remarks: No adjustment at around 98MHz is necessary since the coil for FM tracking adjustment is fixed.

[6] FM Output Level & Signal Meter Adjustment

(1) Make output of the FM signal generator 1mV, 98MHz, modulation 1KHz 100%.
(2) Make this unit receive the signal specified in the foregoing step 1.
(3) Adjust the VR809 to make REC OUT output 1V.
(4) Adjust the VR804 to make the signal meter swing 4.5.

www.hifiengine.com

[7] FM Mutting IF Narrow Adjustment

(1) Make output of the FM signal generator 20μV, 98MHz, modulation 1KHz 100%.
(2) Make this unit receive the signal specified in the forgoing step 1.
(3) Put on the acculock switch and set the muting switch on the rear panel to the right.
(4) Adjust the VR802 to make REC OUT deliver tuner output. (The brake will move)
(5) Set the IF switch at narrow.
(6) Adjust the VR801 to make REC OUT deliver tuner output (The brake will move).
(7) Set the IF switch at wide.
(8) Repeat the step [4]-(5) to (9) for a few times for adjustment.

[8] FM MPX Adjustment

(1) Make output of the FM signal generator 1mV, 98MHz, non-modulation.
(2) Connect a frequency counter to the 812 terminal on the PB-1267.
(3) Adjust the VR806 to make the frequency counter read 76.00KHz +20Hz.
(4) Disconnect the frequency counter.
(5) Make output of the FM signal generator 1mV, 98MHz, modulation 1KHz stereo.
(6) Adjust the VR808 to make separation over 50dB and balanced on right and left.
(7) Adjust the VR803 to make stereo distortion minimal.
(8) Confirm the forgoing step 6 again.

[9] FM Acculock Adjustment

(1) Make output of the FM signal generator 1mV, 98MHz, modulation 1KHz 100%.
(2) Make this unit receive the signal specified in the forgoing step 1 with tuning the tuning knob slowly at the point where the brake works.
(3) Work down the frequency from the FM signal generator by +150KHz and adjust the VR701 (PB-1266) to make tuner output off.

R-1120A AF Alignment Procedures

[1] Idling Current Adjustment

(1) Connect an DC ampere meter to the ID=60mA terminal on the PB-1264 and also connect a mylar condencer or a ceramic condencer of 0.1μF in parallel.
(2) Adjust the VR502a and VR502b to make the idling current 60mA.

[2] Peak Indicator Level Adjustment

(1) Adjust the VR1 and VR2 to make the LED's of 0dB of the peak indicator light up on 120W output at 1KHz.
(2) Make output nill.
(3) Increase output gradually and fix the output at the point where the –24dB LED of the right channel light up.
(4) Adjust the VR3 on the PB-1263 to make the –24dB LED of the left channel light up.
(5) Repeat the forgoing steps 1-4 for a few times for adjustment.

[3] DC Offset Adjustment

(1) Connect a DC voltmeter to the speaker terminals.
(2) Adjust the VR501a and VR501b on the PB-1265 to make the DC volt meter read ON.

www.hifiengine.com

PB-1267 Adjustment Locations
(AM/FM Tuner)

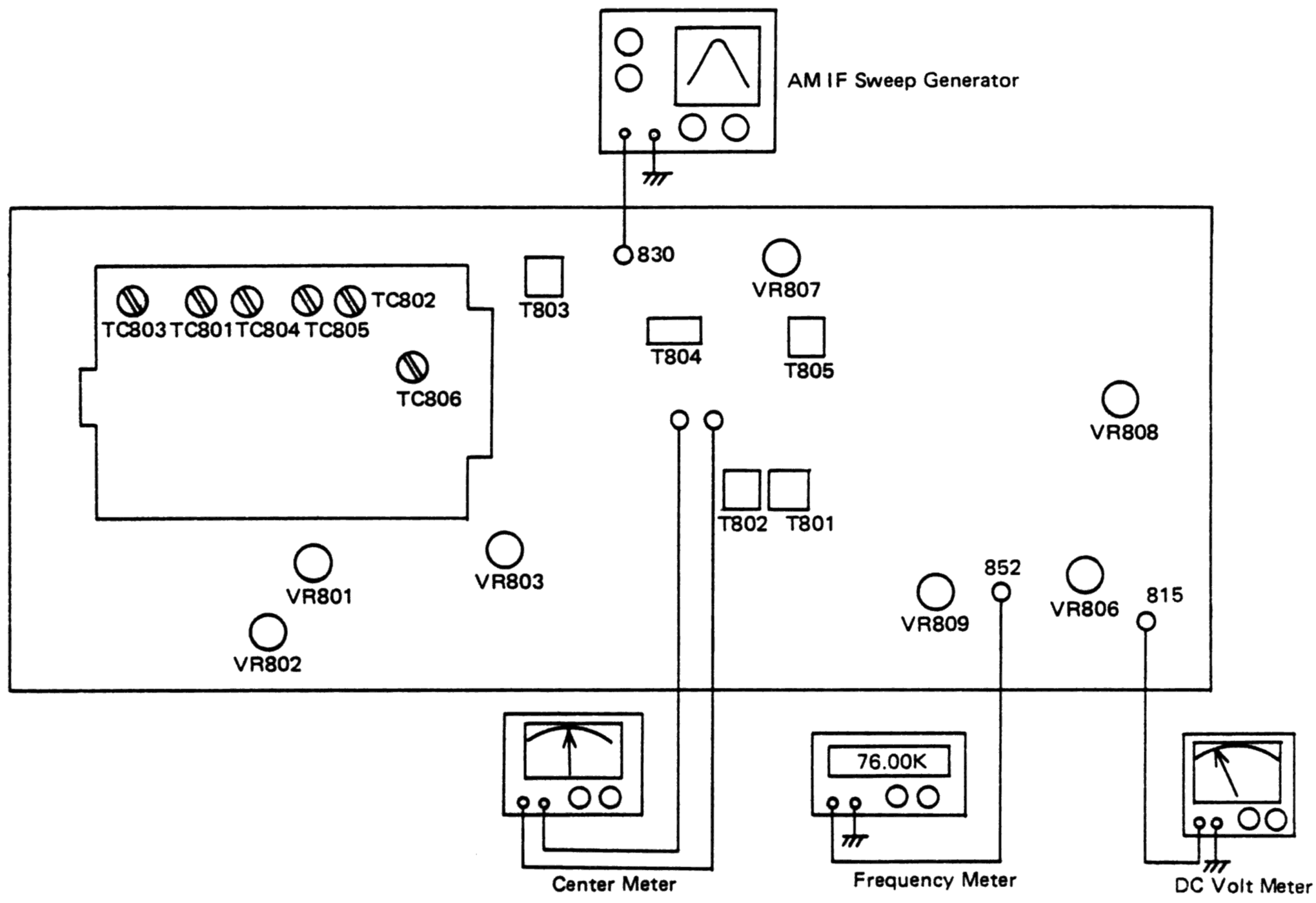

PB-1266 Adjustment Locations

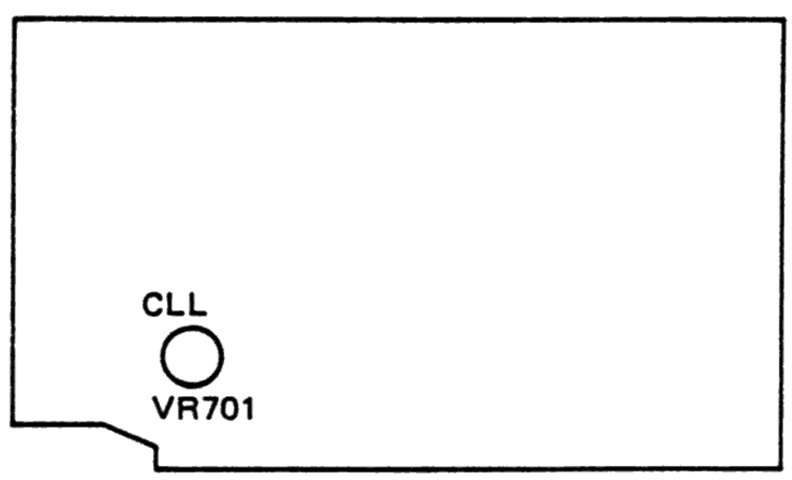

www.hifiengine.com

PB-1236 Adjustment Locations
(Peak Indicator Level)

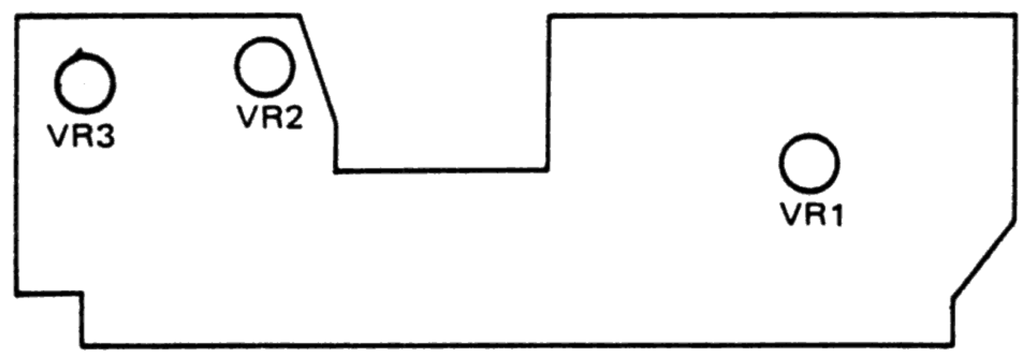

PB-1246 Adjustment Locations
(Idling Current)

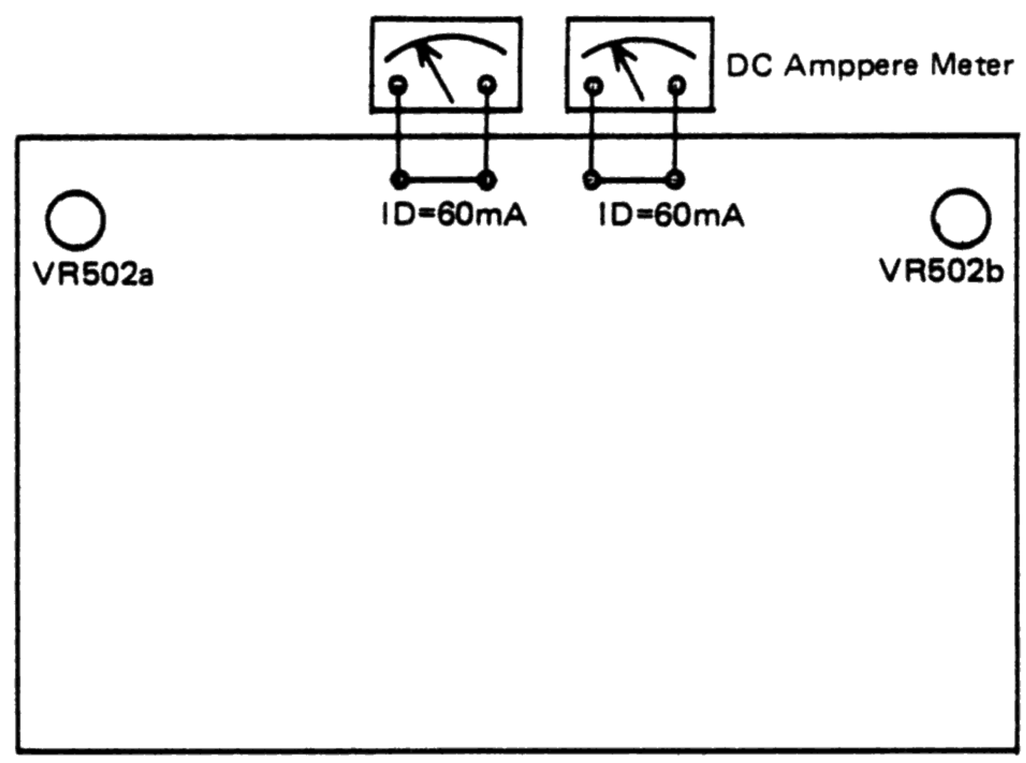

PB-1265 Adjustment Locations
(DC Offset)

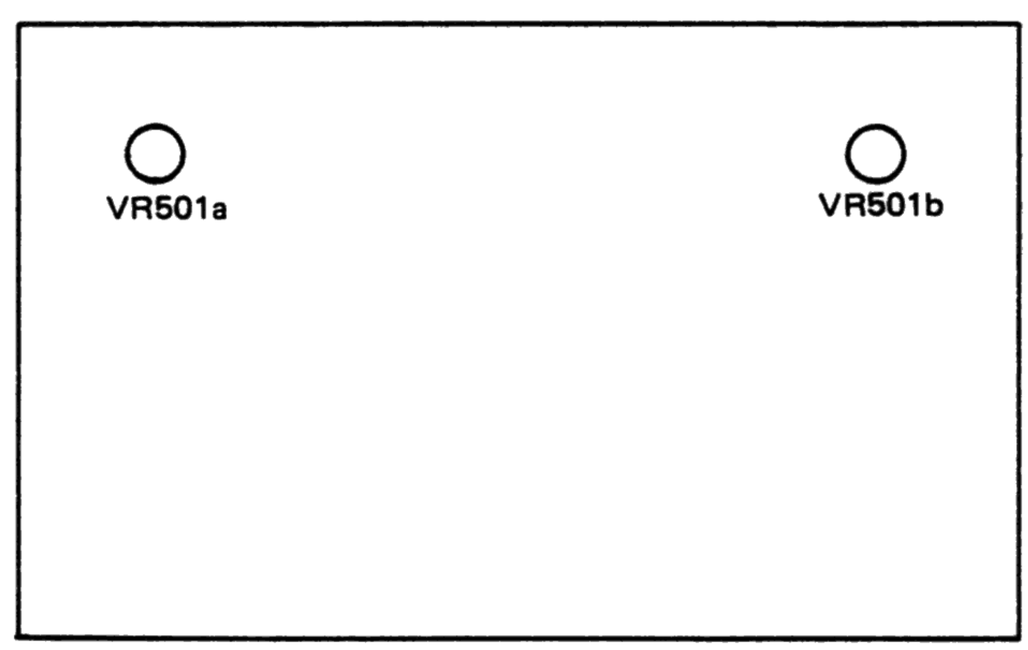

www.hifiengine.com

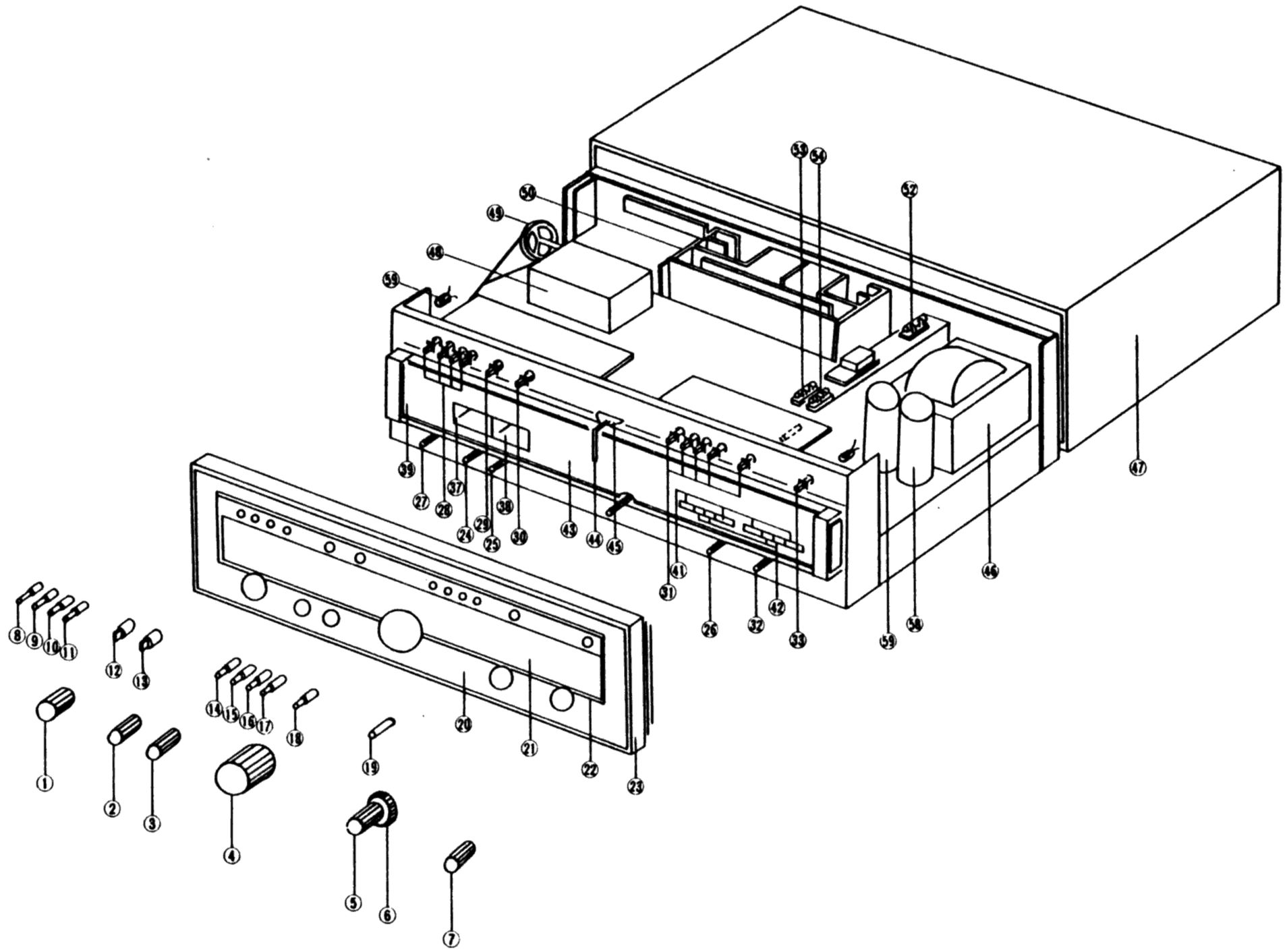

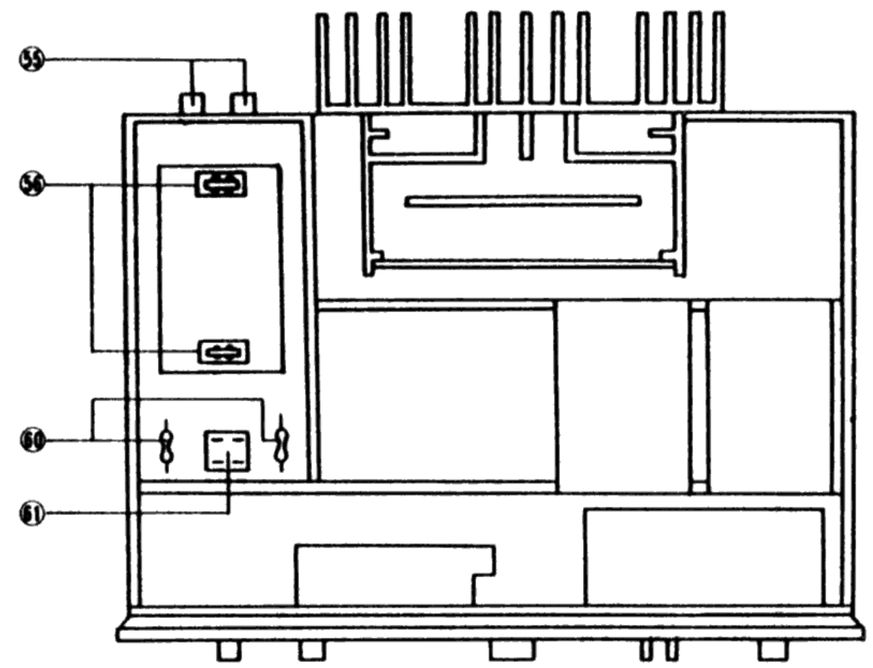

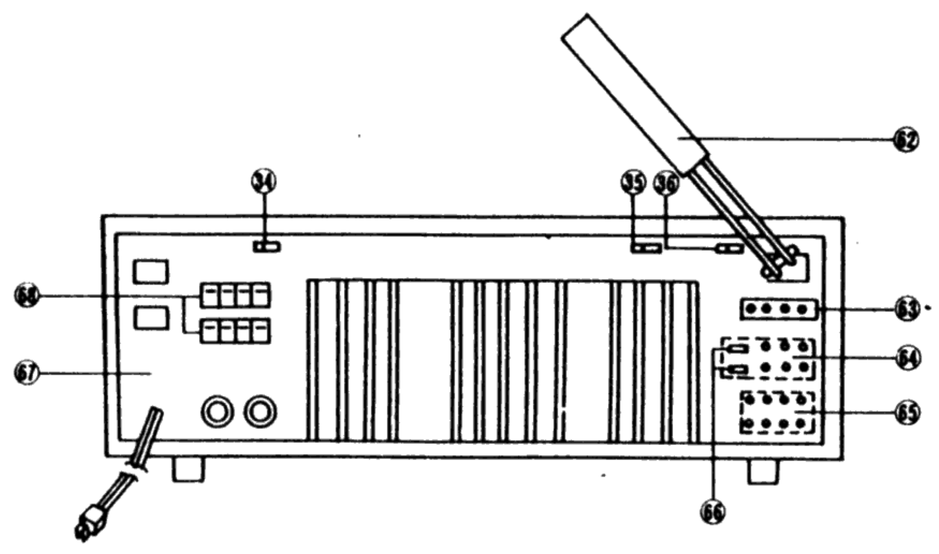

www.hifiengine.com

EXPLODED VEW PARTS LIST

SYMBOL NO.	STOCK NO.	DESCRIPTION
[Knob]		
1	WH1033	Input Selector
2	WH1038	Bass
3	WH1038	Treble
4	WH1035	Tuning
5	WH1039	Volume Control
6	WJ1086	Balance
7	WH1033	Speakers
8	WJ1069	IF Narrow
9	WJ1069	Accutouch Off
10	WJ1069	Monitor
11	WJ1069	Deck 1 or 2
12	WJ1067	Dub Source Dub
13	WJ1067	Mono Stereo Reverce
14	WJ1069	Dolby FM
15	WJ1069	Subsonic
16	WJ1069	High Cut
17	WJ1069	Loudness
18	WJ1069	Peak Indicator
19	WJ1066	Power
[Front Panel Ass'y]		
20	WA1165	Front Panel
21	WE1080	Protector (Glass)
22	WD1111	Escutcheon
23	WD1055	Escutcheon
[Variable Resistor]		
24	RV0161	Bass
25	RV0163	Treble
26	RV0162	Volume Control
[Switch]		
27	SR0124	Input Selector
28	SP0128	Push Switch
29	SR0038	Dub Source Dub
30	SR0087	Mono Stereo Source
31	SP0076	Push Switch
32	SR0083	Speakers
33	SP0089	Power
34	SS0014	Peak Indicator
35	SS0023	Muting
36	SS0013	Out Attenator

SYMBOL NO.	STOCK NO.	DESCRIPTION
[Meter]		
37	AM0040	Signal Strength
38	AM0039	Center Tuning
[L.E.D.]		
39	TD0088	Stereo
40	TD0088	Power
41	TD0150	Peak Level
42	TD0149	Peak Level
[Mechanism]		
43	WM1050	Dial Scale
44	UZ1090	Pointer
45	UZ1089	Slider
46	PT2338	Power Trans
47	WB1063	Wooden Case
48	LA1915	Front-end
49	BX0016	Dial Dram
50	BE1069	Heat Sync
51	BU0049	Foot
[Fuse]		
52	BF0018	7A
53	BF0085	0.75A
54	BF0076	1.5A
55	BF0083	6A
56	BF0074	0.5A
[Electrolytic Parts]		
57	CE1443	Electrolytic 15000μF Capacitor 75WV
58	CE1444	Electrolytic 1500μF Capacitor 75WV
59	AL0039	Lamp 12V 100mA
60	RS5025	Metal Oxide Resistor 10K 1/2W
61	TD0122	Diode Stack S15VB40
[RearPanel Ass'y]		
62	LA1450	Bar Antenna
63	AT0005	Terminal (Antenna)
64	AT0033	Terminal (10P)
65	AT0006	Terminal (8P)
66	UZ1001	Short Pin
67	UC1132	Rear Panel
68	AT0032	Terminal (Speaker)

www.hifiengine.com

PB 1124 Parts List

SYMBOL NO.	STOCK NO.	DESCRIPTION
[Variable Resistor]		
VR301	RV0162	Volume Control
[Transistor]		
Q301a, b	TR0091	2SA836E
Q302a, b	TR0174	2SC1345E
[Capacitor]		
C301a, b	CE0173	3.3μF 25WV LR El
C302a, b	CE0077	47μF 16WV El
C303a, b	CC0012	10pF 50WV Ce
C304a, b	CE0068	47μF 10WV El
C305a, b	CE0173	3.3μF 25WV LR El
C306	CK0146	0.04μF 50WV Ce
C307	CE0101	22μF 50WV El
[Resistor]		
R 301a, b	RB0396	10K 1/8W Rd
R302a, b	RB0436	470K 1/8W Rd
R303a, b	RB0444	1M 1/8W Rd
R304a, b	RB0412	47K 1/8W Rd
R305a, b	RB0382	2.7K 1/8W Rd
R306a, b	RB0364	470 1/8W Rd
R307a, b	RB0402	18K 1/8W Rd
R308a, b	RB0388	4.7K 1/8W Rd
R309	RB0372	1K 1/8W Rd

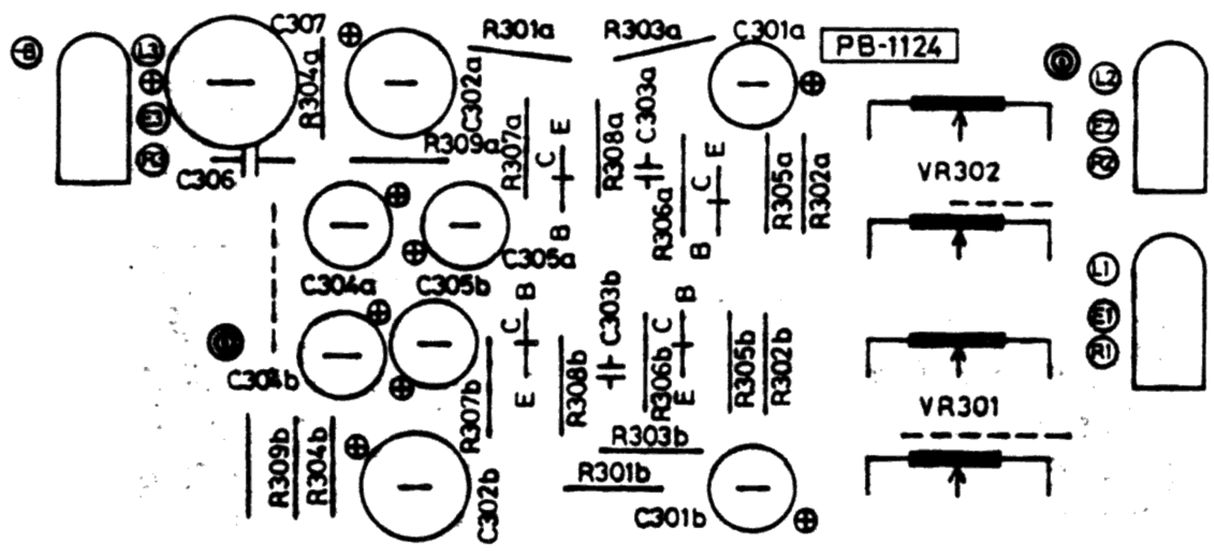

PB 1125 Patrs List

SYMBOL NO.	STOCK NO.	DESCRIPTION
[Variable Resistor]		
VR401	RV0163	Bass 100K
VR402	RV0161	Treble 50K
[Capacitor]		
C401a, b	CQ0008	0.056μF 50WV My
C402a, b	CQ0104	0.022μF 50WV My
C403a, b	CQ0130	1000pF 50WV My
C404a, b	CQ0130	1000pF 50WV My
C405a, b	CQ0128	2200pF 50WV My
C406a, b	CQ0128	2200pF 50WV My
C407a, b	CQ0127	3900pF 50WV My
C408a,b	CE0173	3.3μF 25WV LR My
C409a, b	CE0077	47μF 16WV El
C410a, b	CE0077	47μF 16WV El
C411a, b	CE0173	3.3μF 25WV LR El
C412a, b	CE0101	22μF 50WV El
C413a, b	CK0140	0.047μF 50WV Ce
C414a, b	CC0004	22pF 50WV Ce
[Resistor]		
R401a, b	RB0402	18K 1/8W Rd
R402a, b	RB0452	2.2M 1/8W Rd
R403a, b	RB0452	2.2M 1/8W Rd
R404a, b	RB0402	18K 1/8W Rd
R405a, b	RB0384	3.3K 1/8W Rd
R406a, b	RB0452	2.2M 1/8W Rd
R407a, b	RB0452	2.2M 1/8W Rd
R408a, b	RB0376	1.5M 1/8W Rd
R409a, b	RB0376	1.5K 1/8W Rd
R410a, b	RB0398	12K 1/8W Rd
R411a, b	RB0396	10K 1/8W Rd
R412a, b	RB0376	1.5K 1/8W Rd
R413a, b	RB0424	150K 1/8W Rd
R414a, b	RB0356	220K 1/8W Rd
R415a, b	RB0384	3.3K 1/8W Rd
R416a, b	RD0460	3.3K 1/4W Rd

www.hifiengine.com

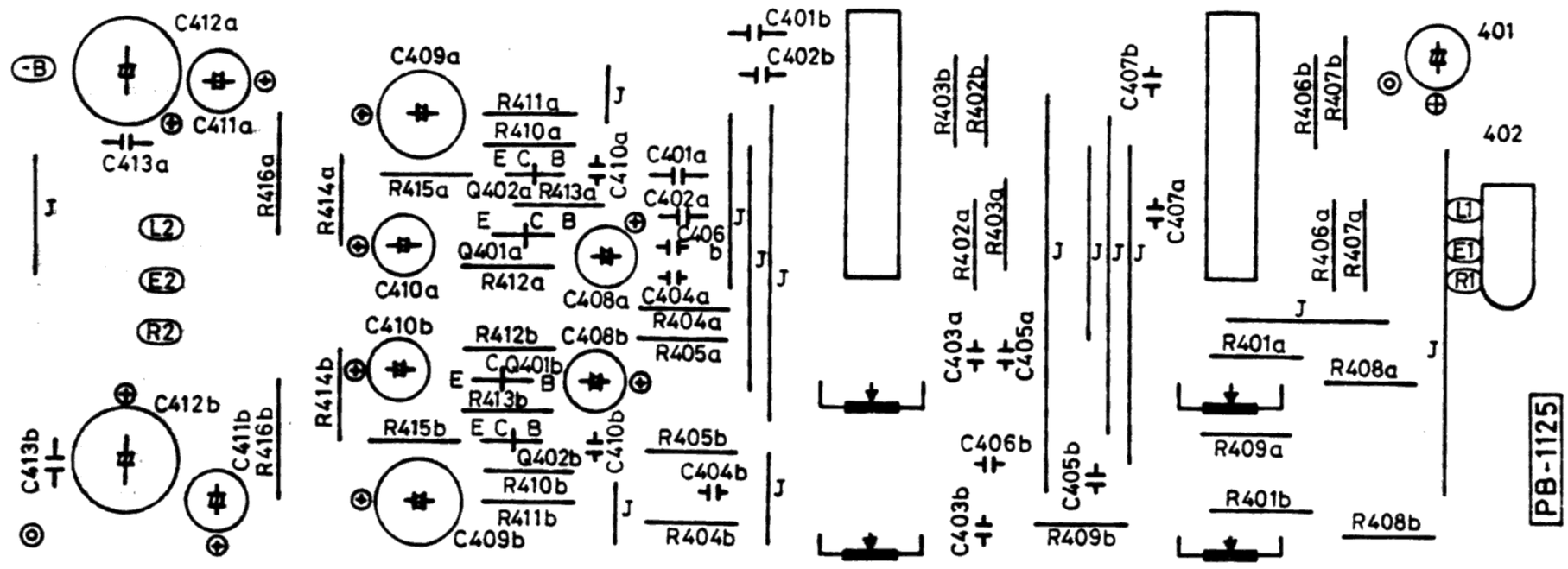

PB 1260 PARTS LIST

SYMBOL NO.	STOCK NO.	DESCRIPTION
[IC, FET, Transistor]		
Q101	TC5010	IC NJM4558DX
Q102a, b	TF0019	FET 2SK147V
Q103a, b	TF0017	FET 2SJ72BL
Q104	TR0198	Tr2SC1815GR
[Zener Diode]		
D101	TD0109	WZ-150
D102	TD0109	WZ-150
[Capacitor]		
C101a, b	CE5025	3.3μF 50WV CX El
C102a, b	CE0135	47μF 10WV El
C103	CE0080	470μF 16WV El
C104a, b	CQ0028	0.0018μF 50WV My
C105a, b	CQ0027	0.0068μF 50WV My
C106	CK0146	0.04μF 50WV Ce
C107	CE0080	470μF 16WV El
C108a, b	CE5025	3.3μF 50WV CX El
C110a, b	CQ0100	820pF 50WV St
C111a, b	CE0131	10μF 16WV LR El
C112a, b	CE0218	1000μF 6.3WV El
C113a, b	CE0218	1000μF 6.3WV El
C114a, b	CE0131	10μF 16WV LR El

SYMBOL NO.	STOCK NO.	DESCRIPTION
C115a, b	CQ0953	1μF 100WV My
C116	CE0077	47μF 16WV El
C117	CE0078	100μF 16WV El
C118	CK0146	0.04μF Ce
[Resistor]		
R101a, b	RD0442	100K 1/4W Rd
R103a, b	RD2079	750 1/4W Rd
R104a, b	RD0466	1K 1/4W Rd
R105a, b	RD0470	470 1/4W Rd
R106a, b	RD0442	100K 1/4W Rd
R107a, b	RD0447	39K 1/4W Rd
R108a, b	RD0434	470K 1/4W Rd
R109	RS2521	560 1/2W
R110	RS2940	2.2K 2W
R111a, b	RD0466	1K 1/4W Rd
R112a, b	RD0442	100K 1/4W Rd
R115a, b	RD0473	270 1/4W Rd
R116a, b	RD2018	2.2 1/4W Rd
R117a, b	RD0461	2.7K 1/4W Rd
R118a, b	RD0478	100 1/4W Rd
R119a, b	RD0478	100 1/4W Rd
R120a, b	RD0461	2.7K 1/4W Rd
R121a, b	RD0470	470 1/4W Rd
R122a, b	RD0442	100K 1/4W Rd
R123	RD0447	39K 1/4W Rd

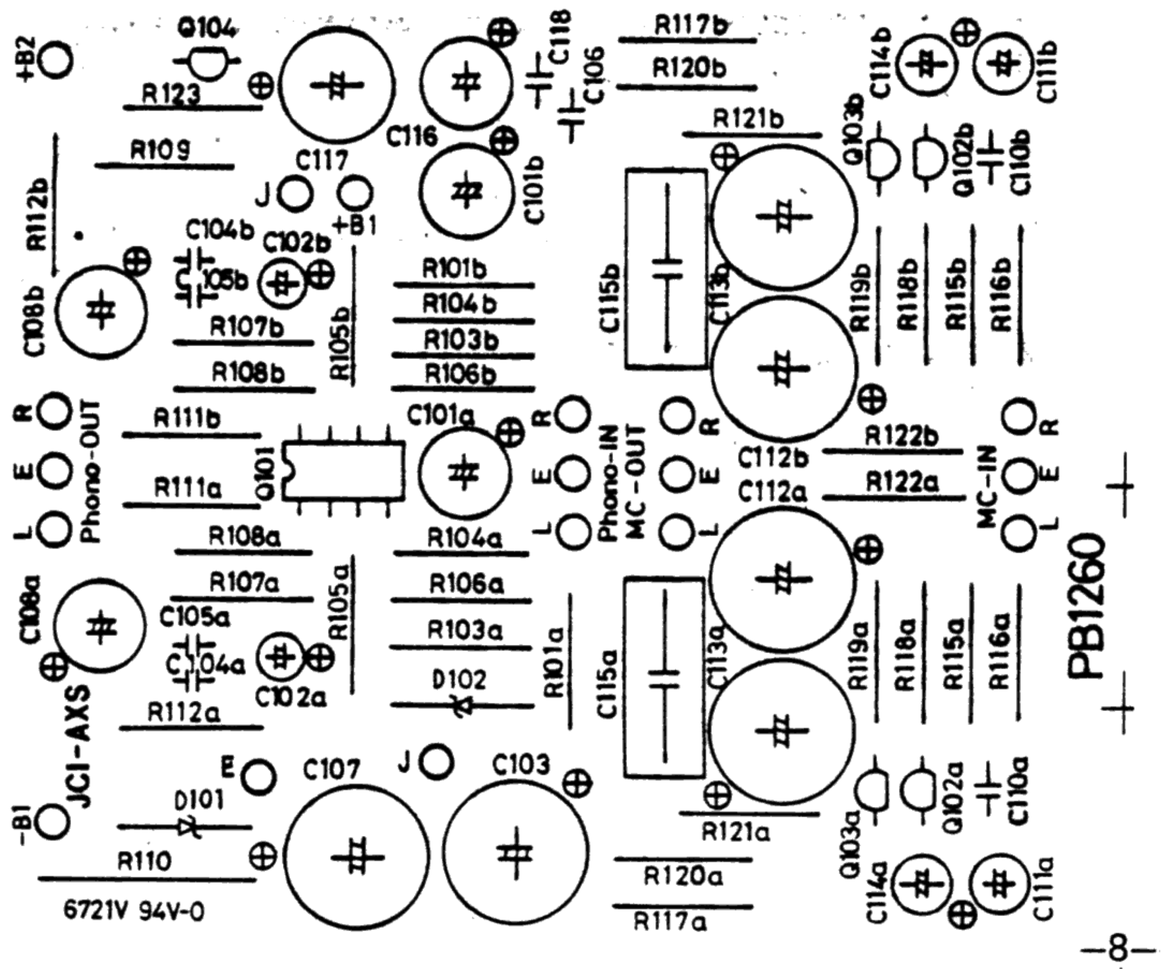

www.hifiengine.com

PB 1261 PARTS LIST

SYMBOL NO.	STOCK NO.	DESCRIPTION
[Switch]		
SS251	SP0128	IF Narrow, Accutouch Monitor, Deck 1 or 2
S252	SR0088	Dub Source Dub
S253	SR0087	Mono Stereo Source

SYMBOL NO.	STOCK NO.	DESCRIPTION		
[Resistor]				
R251	RB0444	1M	1/8W	Rd
R252	RB0444	1M	1/8W	Rd
R253	RB0444	1M	1/8W	Rd
R254	RB0444	1M	1/8W	Rd
R255	RB0390	5.6K	1/8W	Rd
R256	RB0390	5.6K	1/8W	Rd

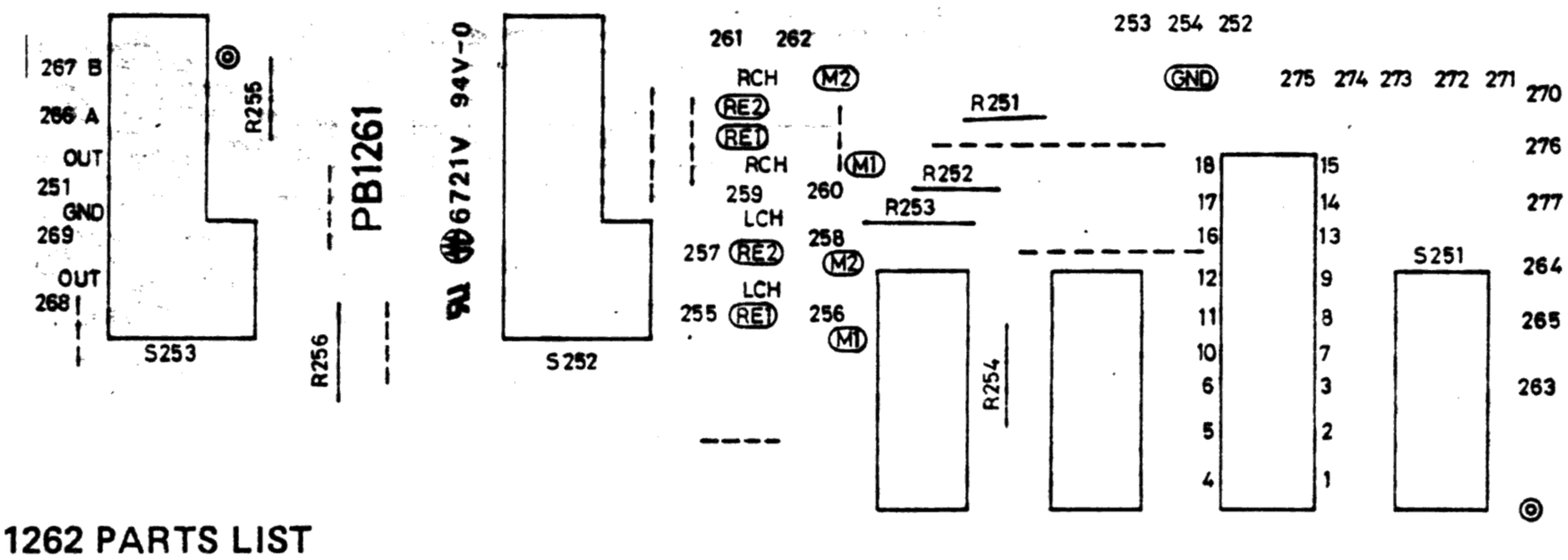

PB 1262 PARTS LIST

SYMBOL NO.	STOCK NO.	DESCRIPTION		
[Switch]				
	SP0076	Peak Indicator, Loudness H.C, S.F Dolby SW		
[Transistor]				
Q1001	TR0174	2SC1345E		
[Diode]				
D1001	TD0116	1S2075		
[Resistor]				
R1001a, b	RB0444	1M	1/8W	Rd
R1005a, b	RB0398	12K	1/8W	Rd
R1006	RB0384	3.3K	1/8W	Rd
R1007	RB0384	3.3K	1/8W	Rd
R1009a, b	RB0406	27K	1/8W	Rd
R1010	RB0396	10K	1/8W	Rd

SYMBOL NO.	STOCK NO.	DESCRIPTION		
R1011	RB0408	33K	1/8W	Rd
R1013	RB0412	47K	1/8W	Rd
R1014	RB0372	1K	1/8W	Rd
R1015	RB0406	27K	1/8W	Rd
R1016	RB0396	10K	1/8W	Rd
R1017	RB0420	100K	1/8W	Rd
R1018	RB0436	470K	1/8W	Rd
[Capacitor]				
C1001a, b	CQ0018	0.0056μF	50WV	My
C1003a, b	CQ0008	0.056μF	50WV	My
C1005a, b	CQ0009	0.047μF	50WV	My
C1007a, b	CE0099	2.2μF	50WV	El
C1009	CK0113	1000pF	50WV	Ce
C1010	CK0113	1000pF	50WV	Ce
C1011	CE0099	2.2μF	50WV	El
C1012	CE0074	10μF	16WV	El
C1013	CK0159	0.1μF	25WV	Ce
C1014	CE0078	100μF	16WV	El

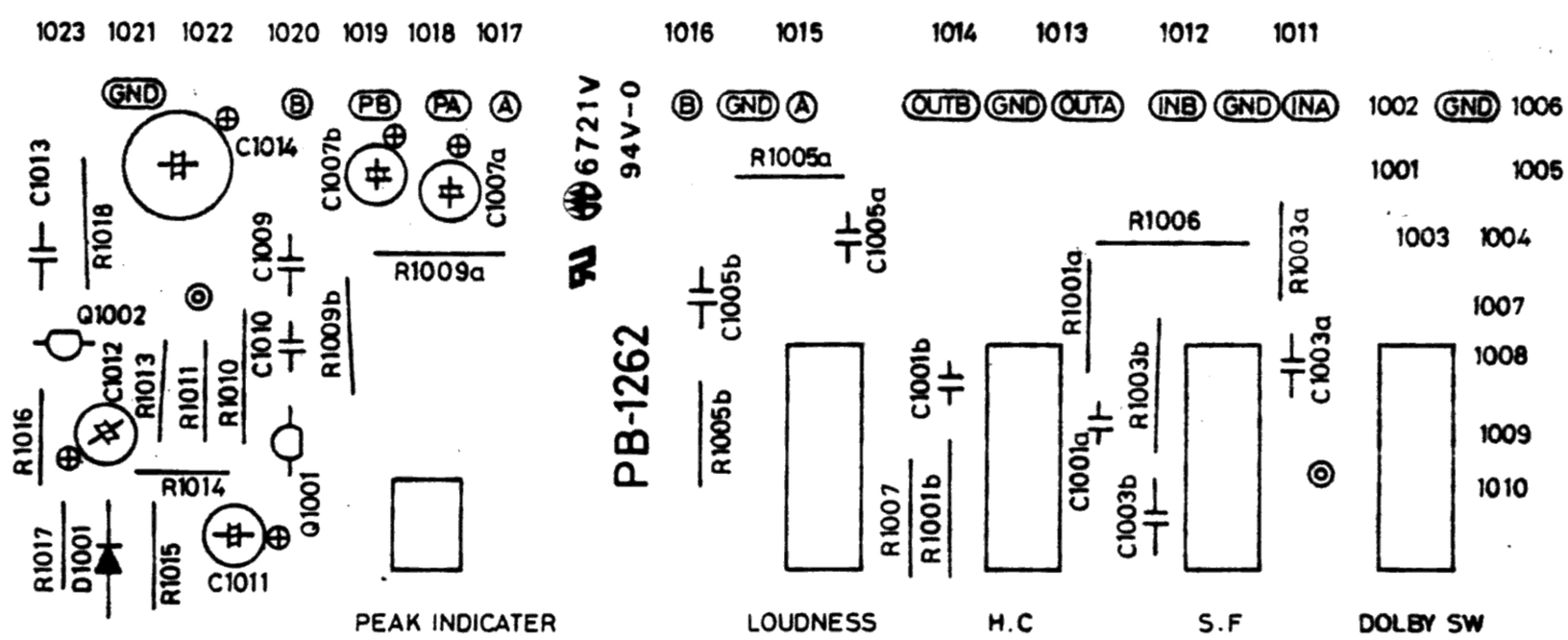

PB 1263 PARTS LIST

SYMBOL NO.	STOCK NO.	DESCRIPTION
[L. E. D.]		
	TD0149	LD-002R Peak Level
	TD0150	LD-003R Peak Level
[IC]		
IC601	TC0101	TA7318P-1
IC602	TC0102	TA7612 AP
IC603	TC0102	TA7612 AP
[Diode]		
D601	TD0002	1N4002
D602	TD0002	1N4002
D603	TD0065	Zener WZ-192
D604	TD5006	Zener BZ-130
D605	TD5006	Zener BZ-130
D606	TD0060	Zener WZ-061
[Variable Resistor]		
VR 1	RT0051	50KB
VR2	RT0051	50KB
VR3	RT0051	50KB

SYMBOL NO.	STOCK NO.	DESCRIPTION
[Capacitor]		
C601	CK0146	0.04μF 50WV Ce
C602	CK0146	0.04μF 50WV Ce
C603	CE0096	220μF 35WV El
C604	CK0146	0.04μF 50WV Ce
C605	CK0146	0.04μF 50WV Ce
C606	CK0146	0.04μF 50WV Ce
C607	CK0146	0.04μF 50WV Ce
C608	CQ0018	0.0056μF 50WV My
C609	CQ0018	0.0056μF 50WV My
C611	CK0146	0.94μF 50WV Ce
[Resistor]		
R601	RS2715	330 1W
R603	RS2715	330 1W
R604	RS2715	330 1W
R605	RS2527	1.8K 1/2W
R606	RB0386	3.9K 1/8W Rd
R607	RB0400	15K 1/8W Rd
R608	RB0392	6.8K 1/8W Rd
R609	RB0392	6.8K 1/8W Rd
R610	RB0392	6.8K 1/8W Rd
R618	RB0400	15K 1/8W Rd
R619	RB0386	3.9K 1/8W Rd
R620	RB0406	27K 1/8W Rd
R621	RB0406	27K 1/8W Rd
R622	RB0386	3.9K 1/8W Rd
R623～R642	RD0460	33K 1/4W Rd

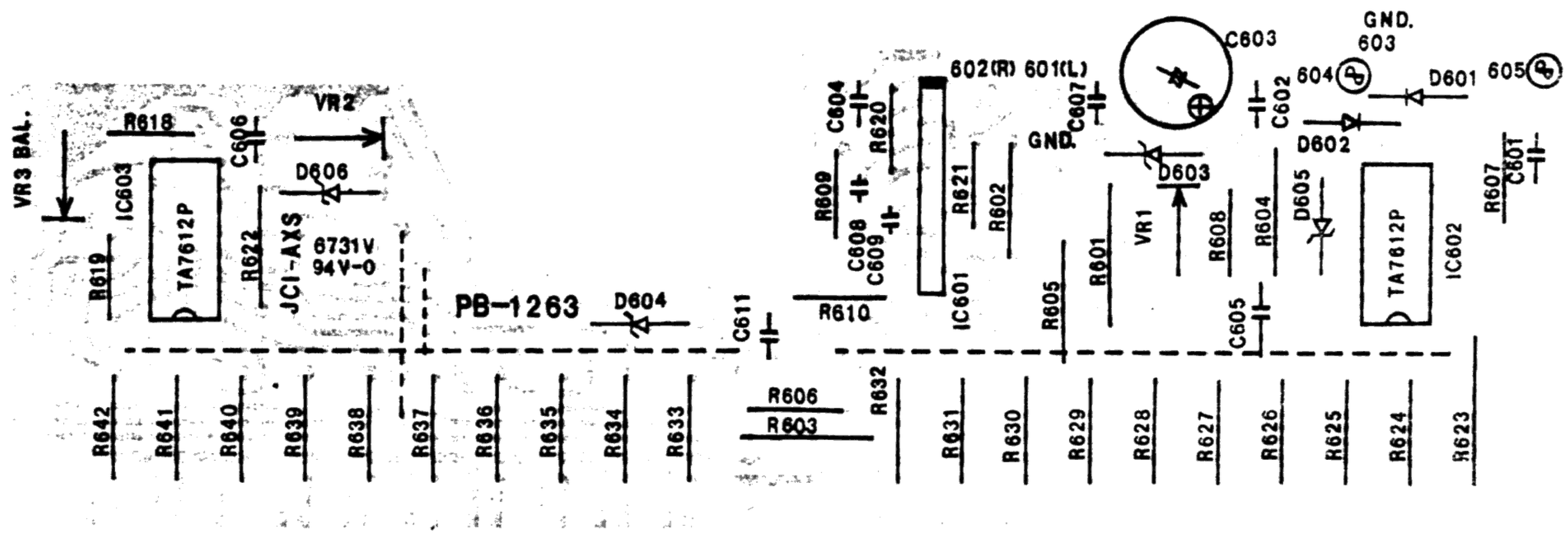

www.hifiengine.com

PB 1264 PARTS LIST

SYMBOL NO.	STOCK NO.	DESCRIPTION
[Variable Resistor]		
VR502a, b	RT0014	470B
[Transistor]		
Q508a, b	TR0208	2SB648A
Q509a, b	TR0165	2SC1775A
Q510a, b	TR0165	2SC1775A
Q511a, b	TR0218	2SA872A
Q512a, b	TR0241	2SA1006
Q513a, b	TR0242	2SC2336
[Diode]		
D502a, b	TV0030	Varistor KB-265C4
D503a, b	TV0026	Varistor STV-2H
D504a, b	TD0116	1S2075
D505a, b	TD0116	1S2075
D506a, b	TD0116	1S2076
D507a, b	TD0116	1S2075
[Coil]		
L501a, b	LA1020	LUX-1020
[Capacitor]		
C510a, b	CQ0163	0.1μF 100WV Fi
C511a, b	CE0085	33μF 25WV El
C512a, b	CE0085	33μF 25WV El

SYMBOL NO.	STOCK NO.	DESCRIPTION
C513a, b	CQ0613	0.1μF 100WV Fi
C515a, b	CK0109	470pF 50WV Ce
C516a, b	CK0109	470pF 50WV Ce
C517a, b	CK0155	0.01μF 25WV Ce
C518a, b	CE0109	33μF 100WV El
C519a, b	CQ0613	0.1μF 100WV Fi
C520a, b	CE0109	33μF 100WV El
C521a, b	CQ0613	0.1μF 100WV Fi
C541a, b	CQ0613	0.1μF 100WV Fi
[Resistor]		
R517a, b	RD0448	33K 1/4W Rd
R518a, b	RD0476	150 1/4W Rd
R519a, b	RD0446	1K 1/4W Rd
R520a, b	RD0464	1.5K 1/4W Rd
R521a, b	RD0467	820 1/4W Rd
R522a, b	RD0467	820 1/4W Rd
R523a, b	RS3071	100 1W
R524a, b	RS3071	100 1W
R525a, b	RD0441	120K 1/4W Rd
R526a, b	RD0441	120K 1/4W Rd
R527a, b	RS0117	10 1W
R529a, b	RS2504	22 1/2W
R530a, b	RD0458	47K 1/4W Rd
R531a, b	RD0458	47K 1/4W Rd
R532a, b	RS2504	22 1/2W
R533a, b	RG2517	0.33 5W Rc
R534a, b	RG2517	0.33 5W Rc
R536a, b	RG2518	4.7 5W Rc
R537a, b	RS0119	1K 2W

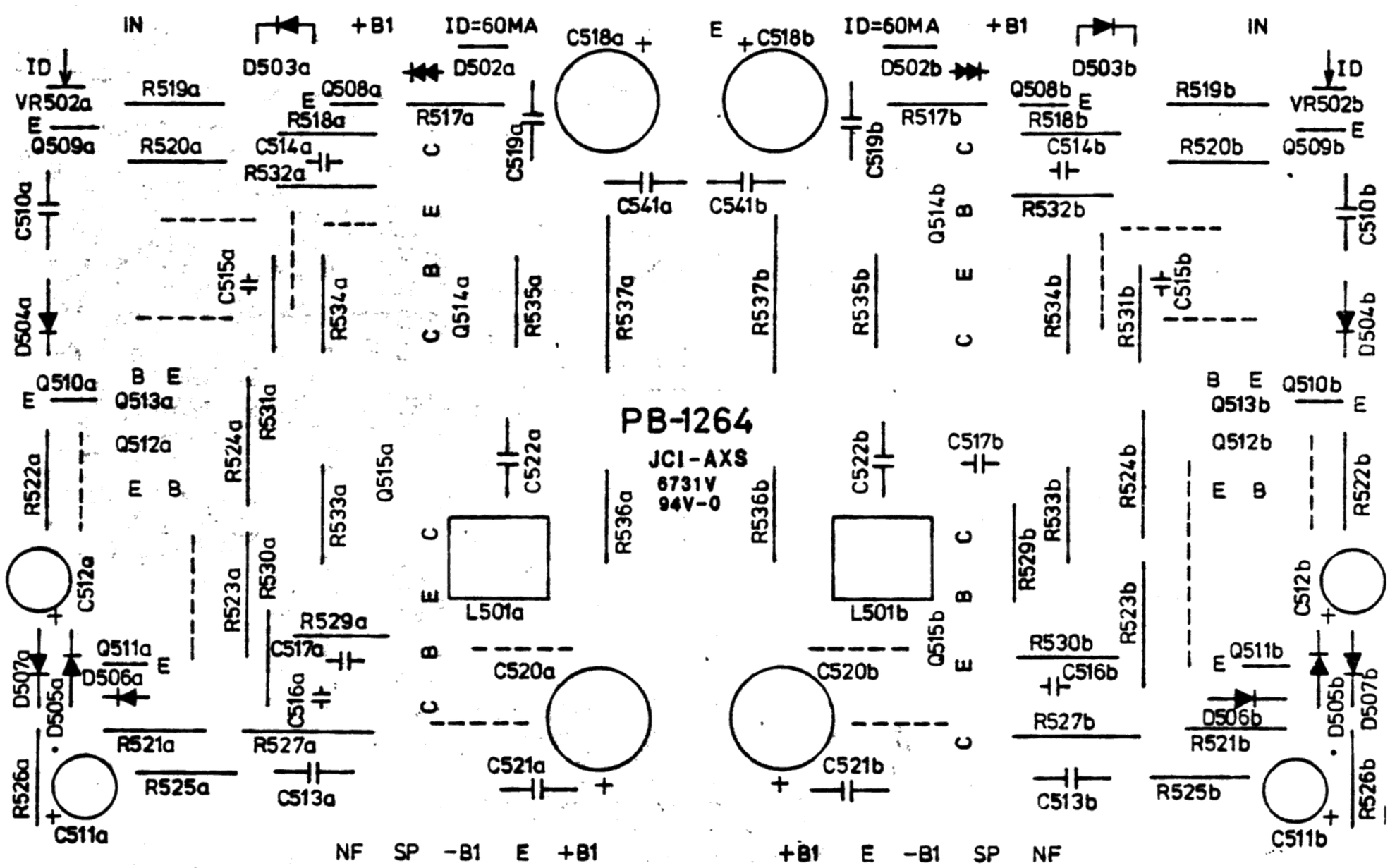

PB 1265 PARTS LIST

SYMBOL NO.	STOCK NO.	DESCRIPTION
[Relay]		
RY501	AY0031	MAT4B-BH
[Transistor]		
Q501a, b	TR0165	2SC1775A
Q502a, b	TR0165	2SC1775A
Q503a, b	TR5003	2SA798G
Q504a, b	TR0218	2SA872A
Q505a, b	TR0218	2SA872A
Q506a, b	TR0090	2SA756
Q507a, b	TR0090	2SA756
Q516	TR0198	2SC1815GR
Q517	TR0198	2SC1815GR
Q518	TR0087	2SA1015
Q519	TR0198	2SC1815GR
Q520	TR0295	2SC2120
Q521	TR0198	2SC1815GR
Q522	TR0198	2SC1815GR
[Didde]		
D501a, b	TD01411	Zener BZ-340
D508	TD0116	1S2075
D509	TD0116	1S2075
D511	TD0116	1S2075
D512	TD0001	1N4001
D513	TD0001	1N4001
D514	TD0141	Zener BZ-340
D515	TD0152	Zener WZ-270
D516	TD0142	Stack SIVB20
[Variable Resistor]		
VR501a, b	RT0014	470B
[Capacitor]		
C501a, b	CE0085	33μF 25WV El
C502a, b	CK0073	100pF 1000WV Ce
C503a, b	CE5019	1μF 50WV CX El
C504a, b	CE0095	100μF 35WV El
C505a, b	CQ0613	0.1μF 100WV Fi
C506a, b	CC0124	33pF 500WV Ce
C507a, b	CK0107	330pF 50WV Ce
C509a, b	CC0124	33pF 500WV Ce
C523a, b	CE0107	47μF 63WV El
C524	CE0079	220μF 16WV El
C525	CE0079	220μF 16WV El
C526	CE0077	47μF 16WV El
C527	CE0074	10μF 16WV El
C528	CE0074	10μF 16WV El

SYMBOL NO.	STOCK NO.	DESCRIPTION
C529	CE0087	220μF 25WV El
C530	CE0080	470μF 16WV El
C531	CE0102	47μF 50WV El
C532	CE0108	100μF 63WV El
C533	CE0111	100μF 100WV El
C534	CE0109	33μF 100WV El
C535a, b	CQ0613	0.1μF 100WV Fi
C536	CK0203	0.01μF 50WV Ce
C537	CK0203	0.01μF 50WV Ce
C538	CK0203	0.01μF 50WV Ce
C539	CK0203	0.01μF 50WV Ce
C542a, b	CQ0613	0.1μF 100WV Fi
C543a, b	CK0073	100pF 1000WV Ce
[Resistor]		
R500a, b	RD0483	39 1/4W Rd
R501a, b	RD2622	47K 1/2W Rd
R502a, b	RD0461	2.7K 1/4W Rd
R503a, b	RD0461	2.7K 1/4W Rd
R504a, b	RD0449	27K 1/4W Rd
R505a, b	RD0446	47K 1/4W Rd
R506a, b	RD0460	3.3K 1/4W Rd
R507a, b	RD0462	2.2K 1/4W Rd
R508a, b	RD2614	22K 1/4W Rd
R509a, b	RD0453	12K 1/4W Rd
R510a, b	RD0449	27K 1/4W Rd
R511a, b	RD0462	2.2K 1/4W Rd
R512a, b	RD0469	560 1/4W Rd
R513a, b	RD0446	47K 1/4W Rd
R514a, b	RD0473	270 1/4W Rd
R515a, b	RD0453	12K 1/4W Rd
R516a, b	RD2590	2.2K 1/2W Rd
R538a, b	RD0448	33K 1/4W Rd
R539	RD0455	8.2K 1/4W Rd
R540	RD0466	1K 1/4W Rd
R541	RD0455	8.2K 1/4W Rd
R542	RD0449	27K 1/4W Rd
R543	RD0445	56K 1/4W Rd
R544a, b	RD0438	220K 1/4W Rd
R545	RD0457	5.6K 1/4W Rd
R546	RD0466	1K 1/4W Rd
R547	RD0439	180K 1/4W Rd
R548	RD0447	39K 1/4W Rd
R549	RD0430	1M 1/4W Rd
R550	RD0462	2.2K 1/4W Rd
R552	RS3073	470 1W
R553	RD0445	56K 1/4W Rd
R554	RD2584	1.2K 1/2W Rd
R555	RS5007	100 2W
R556	RD2598	4.7K 1/2W Rd
R557	RD0457	5.6K 1/4W Rd

www.hifiengine.com

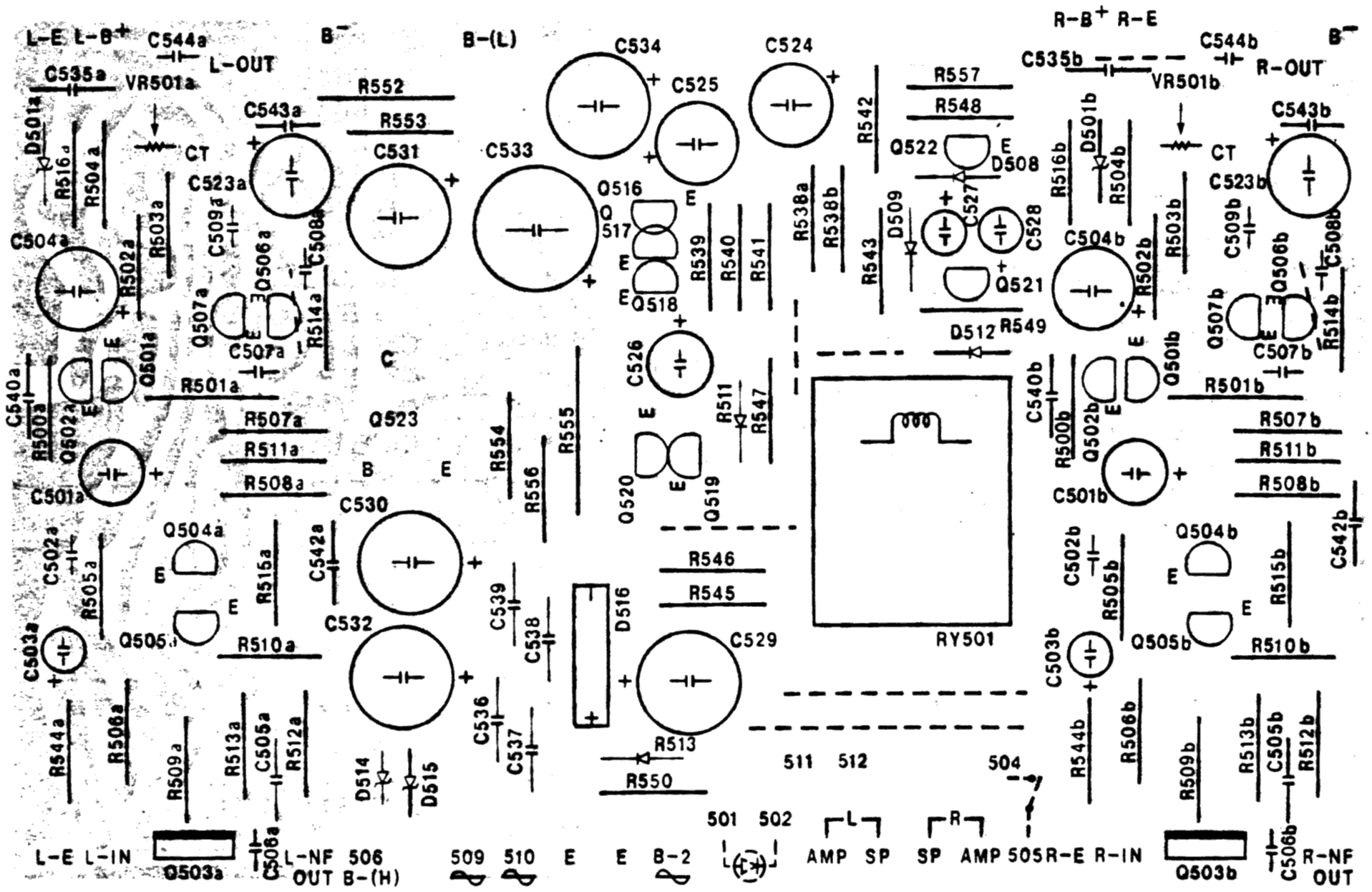

PB-1265

www.hifiengine.com

PB 1266 PARTS LIST

SYMBOL NO.	STOCK NO.	DESCRIPTION
[Variable Resistor]		
VR701	RT0056	50KB
[IC, Transistor, FET]		
Q701	TC5002	IC NJM4558D
Q702	TF0016	FET 2SK106
Q703~Q713	TR0198	TR. 2SC1815GR
Q714	TR0087	TR. 2SA1015Y
Q715	TR0087	TR. 2SA1015Y
Q716	TR0147	TR. 2SC1741R
Q717	TR0122	TR. 2SA816
[Diode]		
D701	TD0018	1K188FM-1
D702	TD0018	1K188FM-1
D703~D705	TD0116	1S2075
D709~D714	TD0116	1S2075
D715	TD0075	Zener WZ-140
D716	TD0116	1S2075
D717	TD0116	1S2075
D718	TD0116	1S2075
[Capacitor]		
C702	CK0126	0.001μF 50WV Ce
C703	CE0173	3.3μF 25WV LR El
C704	CK0155	0.01μF 25WV Ce
C705	CE0310	2.2μF 25WV BP El
C706	CE0448	0.47μF 50WV BP El
C707	CK0158	0.047μF 25WV Ce
C708	CE0439	10μF 16WV BP El
C709	CE0074	10μF 16WV El
C710	CE0078	100μF 16WV El
C711	CE0078	100μF 16WV El
C712	CE0145	100μF 25WV El
C713	CK0155	0.01μF 25WV Ce
C714	CE0077	47μF 16WV El
C715	CE0077	47μF 16WV El
C716	CE0448	0.47μF 50WV BP El
[Resistor]		
R701	RB0414	56K 1/8W Rd
R702	RB0414	56K 1/8W Rd
R703	RB0440	680K 1/8W Rd
R704	RB0440	680K 1/8W Rd

SYMBOL NO.	STOCK NO.	DESCRIPTION
R705	RB0388	47K 1/8W Rd
R706	RB0398	12K 1/8W Rd
R707	RB0398	12K 1/8W Rd
R708	RB0372	1K 1/8W Rd
R709	RB0400	15K 1/8W Rd
R710	RB0396	10K 1/8W Rd
R712	RB0396	10K 1/8W Rd
R713	RB0424	150K 1/8W Rd
R714	RB0404	22K 1/8W Rd
R715	RB0404	22K 1/8W Rd
R716	RB0342	56 1/8W Rd
R717	RB0378	1.8K 1/8W Rd
R718	RB0400	15K 1/8W Rd
R719	RB0380	2.2K 1/8W Rd
R720	RB0412	47K 1/8W Rd
R721	RB0372	1K 1/8W Rd
R722	RB0396	10K 1/8W Rd
R723	RB0396	10K 1/8W Rd
R724	RB0412	47K 1 /8W Rd
R725	RB0396	10K 1/8W Rd
R726	RB0396	10K 1/8W Rd
R727	RB0412	47K 1/8W Rd
R729	RB0420	100K 1/8W Rd
R730	RB0396	10K 1/8W Rd
R731	RB0388	4.7K 1/8W Rd
R732	RB0408	33K 1/8W Rd
R733	RB0388	4.7K 1/8W Rd
R735	RB0404	22K 1/8W Rd
R736	RB0438	560K 1/8W Rd
R737	RB0388	4.7K 1/8W Rd
R738	RB0420	100K 1/8W Rd
R739	RB0444	1M 1/8W Rd
R740	RB0412	47K 1/8W Rd
R741	RB0396	10K 1/8W Rd
R742	RB0388	4.7K 1/8W Rd
R743	RB0420	100K 1/8W Rd
R744	RB0420	100K 1/8W Rd
R745	RB0388	4.7K 1/8W Rd
R746	RB0412	47K 1/8W Rd
R747	RB0396	10K 1/8W Rd
R748	RB0412	47K 1/8W Rd
R749	RB0396	10K 1/8W Rd
R750	RB0436	470K 1/8W Rd
R751	RB0394	8.2K 1/8W Rd
R752	RB0396	10K 1/8W Rd
R753	RB0396	10K 1/8W Rd
R756	RB0324	10 1/8W Rd
R757	RD0473	270 1/4W Rd
R758	RD2568	270 1/2W Rd
R759	RB0348	100 1/2W Rd

www.hifiengine.com

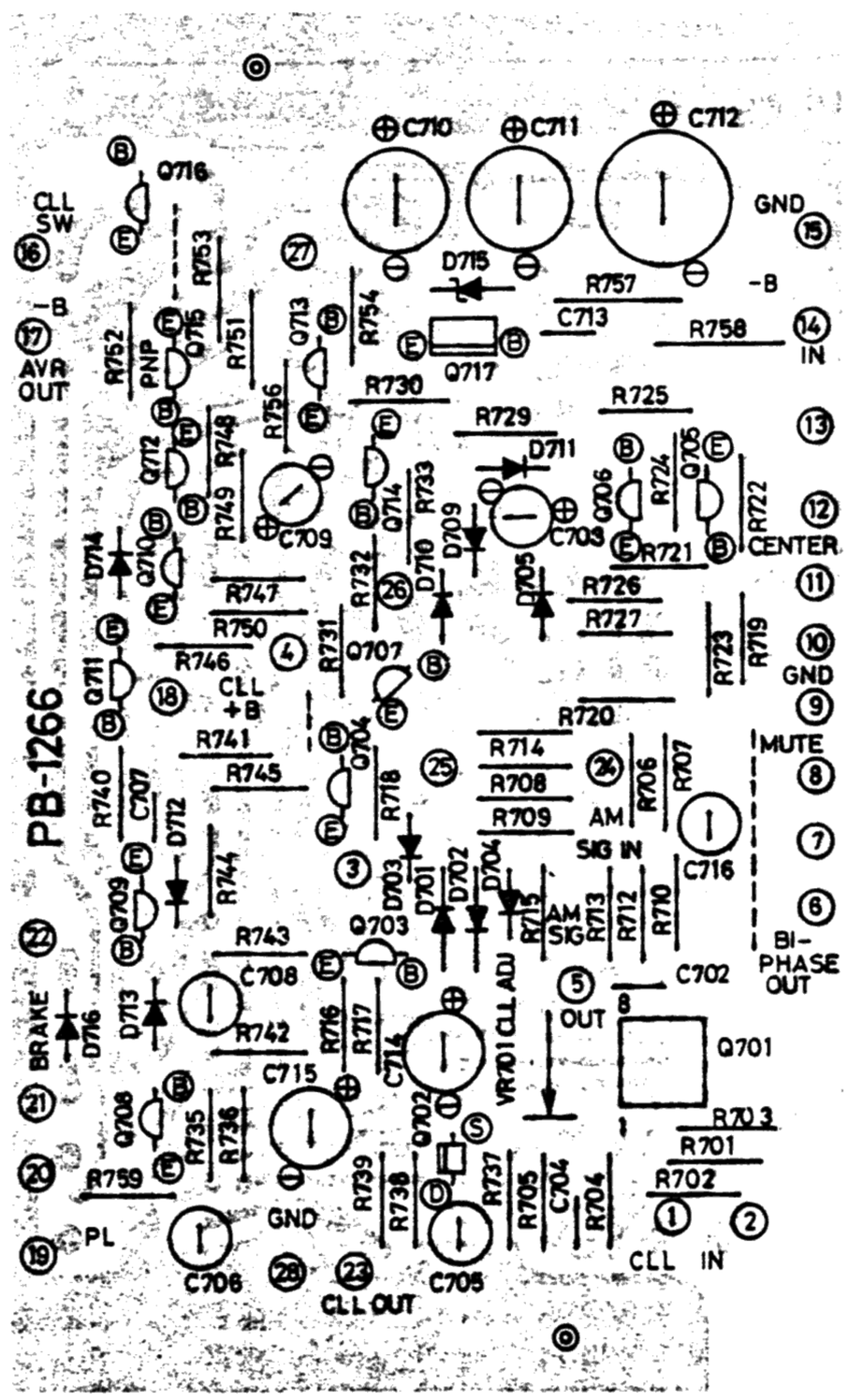
PB-1266
CLL SW
-B
AVR OUT
GND
IN
CENTER
GND
MUTE
BI-PHASE OUT
CLL +B
AM SIG IN
AM SIG
CLL ADJ
OUT
BRAKE
PL
GND
CLL OUT
CLL IN

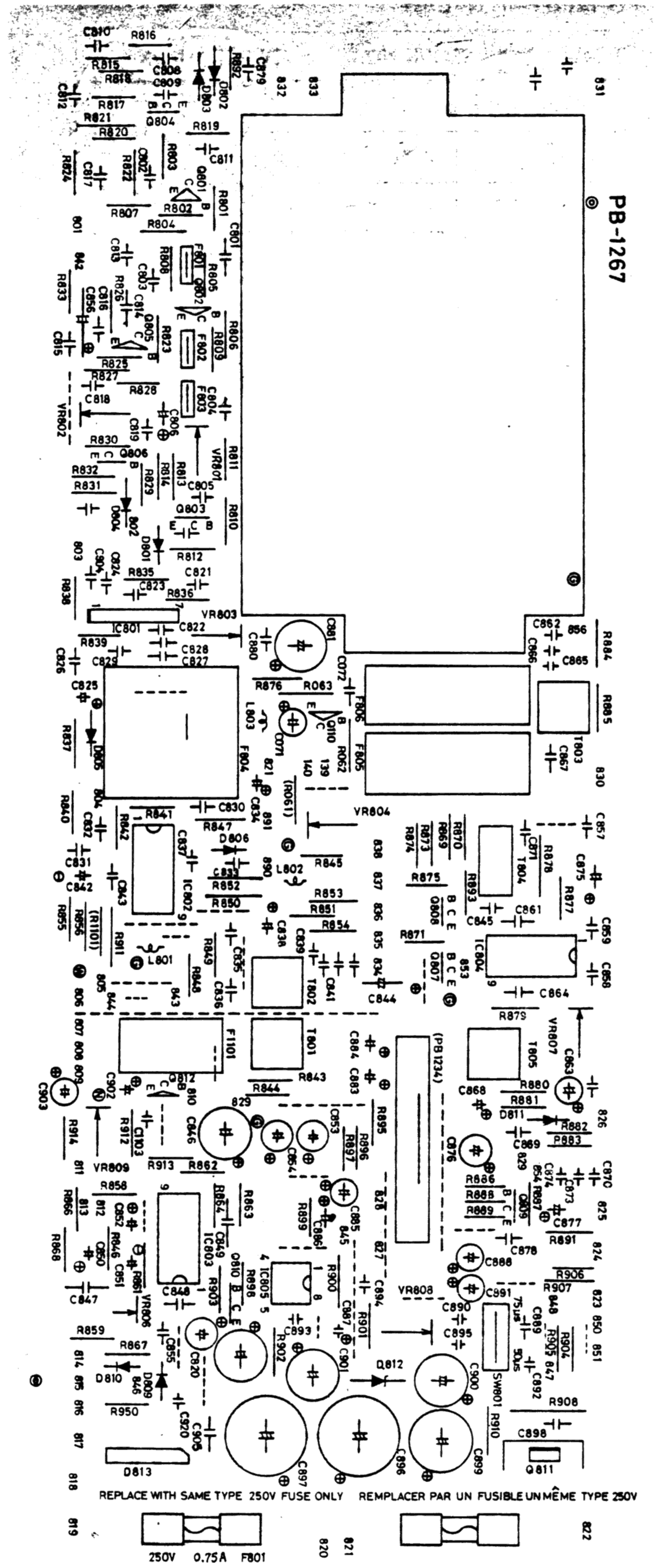
PB-1267
REPLACE WITH SAME TYPE 250V FUSE ONLY
REMPLACER PAR UN FUSIBLE UN MÊME TYPE 250V
250V 0.75A F801

PB 1267 PARTS LIST

SYMBOL NO.	STOCK NO.	DESCRIPTION
[Front-end]		
	LA1915	FR615U12
[Variable Resistor]		
VR801	RT0050	500B
VR802	RT0050	500B
VR803	RT0051	5KB
VR804	RT0052	20KB
VR806	RT0025	4.7KB
VR807	RT0051	5KB
VR808	RT0085	100KB
VR809	RT0086	10KB
[IC]		
IC801	TC0106	μPC1163H
IC802	TC0099	LA1231NS
IC803	TC0100	MPC1173C
IC804	TC0021	HA1197
IC805	TC5002	NJM4558D
[Transistor]		
Q801	TR0233	2SC535
Q802	TR0019	2SC1923
Q803	TR0019	2SC1923
Q804	TR0019	2SC1923
Q805	TR0019	2SC1923
Q806	TR0019	2SC1923
Q807	TR0198	2SC1815
Q808	TR0198	2SC1815
Q809	TR0174	2SC1345
Q810	TR0198	2SC1815
Q811	TR0121	2SC1626
Q812	TR0174	2SC1345
[Diode]		
D801	TD0116	1S2075
D802	TD0018	1K188FM-1
D803	TD0018	1K188FM-1
D804	TD0116	1S2075
D805	TD0116	1S2075
D806	TV0030	Varistor KB-265C4
D809	TD0116	1S2075
D810	TD0116	1S2075
D811	TD0116	1S2075
D812	TD0079	Zener WZ-140
D813	TD0137	Stack S1VB10
[AM. FM. Trans]		
T801	LA1148	FM LUX-1148
T802	LA1147	FM LUX-1147
T803	LA1073	AM LUX-1073
T804	LA1098	AM FSN-1067
T805	LA1100	AM LA-1100

SYMBOL NO.	STOCK NO.	DESCRIPTION
[Choke Coil]		
L801	LA1149	S-180J
L802	LA1143	S-470K
L803	LA1143	S-470K
[Filter]		
F801	LA1829	KMFC112-M-12
F802	LA1829	KMFC112-M-12
F803	LA1829	KMFC112-M-12
F804	LA1150	LUX-1150
F805	LA1191	LUX-1191
F806	LA1191	LUX-1191
[Capacitor]		
C801	CK0155	0.01μF 25WV Ce
C802	CK0158	0.047μF 25WV Ce
C803	CK0158	0.047μF 25WV Ce
C804	CK0158	0.047μF 25WV Ce
C805	CK0155	0.01μF 25WV Ce
C806	CE0074	10μF 16WV El
C808	CK0158	0.047μF 25WV Ce
C809	CK0155	0.01μF 25WV Ce
C810	CK0158	0.047μF 25WV Ce
C811	CK0158	0.047μF 25WV Ce
C812	CK0158	0.047μF 25WV Ce
C813	CK0155	0.01μF 25WV Ce
C814	CK0155	0.01μF 25WV Ce
C815	CK0158	0.047μF 25WV Ce
C816	CK0158	0.047μF 25WV Ce
C817	CK0158	0.047μF 25WV Ce
C818	CK0158	0.047μF 25WV Ce
C819	CK0155	0.01μF 25WV Ce
C820	CE0075	22μF 16WV El
C821	CK0155	0.01μF 25WV Ce
C822	CK0158	0.047μF 25WV Ce
C823	CK0158	0.047μF 25WV Ce
C824	CK0158	0.047μF 25WV Ce
C825	CE0099	2.2μF 50WV El
C826	CK0158	0.047μF 25WV Ce
C827	CC0156	7pF 100WV Ce
C828	CC0154	3pF 50WV Ce
C829	CK0155	0.01μF 25WV Ce
C830	CK0155	0.01μF 25WV Ce
C831	CK0158	0.047μF 25WV Ce
C832	CK0158	0.047μF 25WV Ce
C833	CK0158	0.047μF 25WV Ce
C834	CE0074	10μF 16WV El
C835	CK0158	0.047μF 25WV Ce
C836	CK0158	0.047μF 25WV Ce
C837	CK0158	0.047μF 25WV Ce
C838	CE0213	0.47μF 50WV El
C839	CK0158	0.047μF 25WV Ce
C841	CK0158	0.047μF 25WV Ce
C842	CE0099	2.2μF 50WV El
C843	CC0007	100pF 50WV Ce
C845	CK0156	0.022μF 25WV Ce
C846	CE0079	220μF 16WV El
C847	CQ0079	470pF 50WV St

www.hifiengine.com

PB 1267 PARTS LIST

SYMBOL NO.	STOCK NO.	DESCRIPTION
C848	CK0158	0.047μF 25WV Ce
C849	CQ0079	470pF 50WV St
C850	CE0168	3.3μF 50WV El
C851	CE0098	1μF 50WV El
C852	CS0455	0.22μF 35WV Ta
C853	CE0099	2.2μF 50WV El
C854	CE0099	2.2μF 50WV El
C855	CK0155	0.01μF 25WV Ce
C856	CE0074	10μF 16WV El
C857	CK0156	0.022μF 25WV Ce
C858	CK0158	0.047μF 25WV Ce
C859	CK0126	0.001μF 50WV Ce
C861	CK0156	0.022μF 25WV Ce
C862	CC0013	15pF 50WV Ce
C863	CE0074	10μF 16WV El
C864	CK0126	0.001μF 50WV Ce
C865	CC0004	22pF 50WV Ce
C866	CQ0172	330pF 50WV St
C867	CK0156	0.022μF 25WV Ce
C868	CE0168	3.3μF 50WV El
C869	CK0155	0.01μF 25WV Ce
C870	CQ0157	0.018μF 50WV My
C871	CK0158	0.047μF 25WV Ce
C873	CQ0025	0.012μF 50WV My
C874	CQ0013	0.022μF 50WV My
C875	CE0079	220μF 16WV El
C876	CE0074	10μF 16WV El
C877	CE0213	0.47μF 50WV El
C878	CK0158	0.047μF 25WV Ce
C879	CK0158	0.047μF 25WV Ce
C880	CK0158	0.047μF 25WV Ce
C881	CE0079	220μF 16WV El
C883	CS0445	0.22μF 35WV Ta
C884	CS0445	0.22μF 35WV Ta
C885	CE0084	4.7μF 25WV El
C886	CE0075	22μF 16WV El
C887	CE0075	22μF 16WV El
C888	CE0884	4.7μF 25WV El
C889	CQ0218	750pF 50WV St
C890	CQ0218	750pF 50WV St
C891	CE0084	4.7μF 25WV El
C892	CQ0218	750pF 50WV St
C893	CQ0218	750pF 50WV St
C894	CQ0218	750pF 50WV St
C895	CQ0218	750pF 50WV St
C896	CE0090	1000μF 25WV El
C897	CE0090	1000μF 25WV El
C898	CK0158	0.047μF 25WV Ce
C899	CE0087	220μF 25WV El
C900	CE0079	220μF 16WV El
C901	CE0079	220μF 16WV El
C902	CE0075	22μF 16WV El
C903	CE0075	22μF 16WV El
C904	CK0158	0.047μF 25WV Ce
C905	CK0158	0.047μF 25WV Ce
C920	CK0155	0.01μF 25WV Ce
[Resistor]		
R801	RB0364	470 1/8W Rd
R802	RB0390	5.6K 1/8W Rd

SYMBOL NO.	STOCK NO.	DESCRIPTION
R803	RB0348	100 1/8W Rd
R804	RB0360	330 1/8W Rd
R805	RB0372	1K 1/8W Rd
R806	RB0396	10K 1/8W Rd
R807	RB0348	100K 1/8W Rd
R808	RB0364	470 1/8W Rd
R809	RB0360	330 1/8W Rd
R810	RB0388	4.7K 1/8W Rd
R811	RB0412	47K 1/8W Rd
R812	RB0356	220 1/8W Rd
R813	RB0366	560 1/8W Rd
R814	RB0348	100 1/8W Rd
R815	RB0400	15K 1/8W Rd
R816	RB0420	100K 1/8W Rd
R817	RB0390	5.6K 1/8W Rd
R818	RB0406	27K 1/8W Rd
R819	RB0372	1K 1/8W Rd
R820	RB0416	68K 1/8W Rd
R821	RB0398	12K 1/8W Rd
R822	RB0372	1K 1/8W Rd
R823	RB0372	1K 1/8W Rd
R824	RB0348	100 1/8W Rd
R825	RB0396	10K 1/8W Rd
R826	RB0364	470 1/8W Rd
R827	RB0360	330 1/8W Rd
R828	RB0388	4.7K 1/8W Rd
R829	RB0388	4.7K 1/8W Rd
R830	RB0412	47K 1/8W Rd
R831	RB0356	220 1/8W Rd
R832	RB0366	560 1/8W Rd
R833	RB0348	100 1/8W Rd
R835	RB0388	4.7K 1/8W Rd
R836	RB0372	1K 1/8W Rd
R837	RB0408	33K 1/8W Rd
R838	RB0356	220 1/8W Rd
R839	RB0372	1K 1/8W Rd
R840	RB0408	33K 1/8W Rd
R841	RB0324	10 1/8W Rd
R842	RB0362	390 1/8W Rd
R843	RB0378	1.8K 1/8W Rd
R844	RB0408	33K 1/8W Rd
R845	RB0396	10K 1/8W Rd
R846	RB0372	1K 1/8W Rd
R847	RB0396	10K 1/8W Rd
R848	RB0412	47K 1/8W Rd
R849	RB0392	6.8K 1/8W Rd
R850	RB0356	220 1/8W Rd
R851	RB0404	22K 1/8W Rd
R852	RB0324	10 1/8W Rd
R853	RB0404	22K 1/8W Rd
R854	RB0404	22K 1/8W Rd
R855	RB0414	56K 1/8W Rd
R856	RB0404	22K 1/8W Rd
R858	RB0396	10K 1/8W Rd
R859	RB0403	20K 1/8W Rd
R861	RB0420	100K 1/8W Rd
R862	RB0372	1K 1/8W Rd
R863	RB0384	3.3K 1/8W Rd
R864	RB0384	3.3K 1/8W Rd
R866	RB0364	470 1/8W Rd
R867	RB0396	10K 1/8W Rd

www.hifiengine.com

PB 1267 PARTS LIST

SYMBOL NO.	STOCK NO.	DESCRIPTION		
R868	RB0368	680	1/8W	Rd
R869	RB0384	3.3K	1/8W	Rd
R870	RB0384	3.3K	1/8W	Rd
R871	RB0396	10K	1/8W	Rd
R873	RB0384	3.3K	1/8W	Rd
R874	RB0384	3.3K	1/8W	Rd
R875	RB0396	10K	1/8W	Rd
R876	RB0348	100	1/8W	Rd
R877	RB0324	10	1/8W	Rd
R878	RB0376	1.5K	1/8W	Rd
R879	RB0360	330	1/8W	Rd
R880	RB0396	10K	1/8W	Rd
R881	RB0396	10K	1/8W	Rd
R882	RB0382	2.7K	1/8W	Rd
R883	RB0406	27K	1/8W	Rd
R884	RB0372	1K	1/8W	Rd
R885	RB0364	470	1/8W	Rd
R886	RB0424	150K	1/8W	Rd
R887	RB0406	27K	1/8W	Rd
R888	RB0374	1.2K	1/8W	Rd
R889	RB0362	390	1/8W	Rd
R891	RB0412	47K	1/8W	Rd

SYMBOL NO.	STOCK NO.	DESCRIPTION		
R892	RB0412	47K	1/8W	Rd
R893	RB0390	5.6K	1/8W	Rd
R895	RB0412	47K	1/8W	Rd
R896	RB0420	100K	1/8W	Rd
R898	RB0412	47K	1/8W	Rd
R899	RB0380	2.2K	1/8W	Rd
R900	RB0380	2.2K	1/8W	Rd
R901	RB0396	10K	1/8W	Rd
R902	RB0324	10	1/8W	Rd
R903	RB0412	47K	1/8W	Rd
R804	RB0408	33K	1/8W	Rd
R905	RB0408	33K	1/8W	Rd
R906	RB0396	10K	1/8W	Rd
R907	RB0396	10K	1/8W	Rd
R908	RD2568	270	1/8W	Rd
R910	RB0358	270	1/8W	Rd
R911	RB0396	10K	1/8W	Rd
R912	RB0388	4.7K	1/8W	Rd
R913	RB0396	10K	1/8W	Rd
R914	RB0396	10K	1/8W	Rd
R950	RB0412	47K	1/8W	Rd

PB 1268 PARTS LIST

SYMBOL NO.	STOCK NO.	DESCRIPTION
[Switch]		
S201	SR0124	Input Selecter
[Transistor]		
Q201	TR0091	2SA836
[Diode]		
D201 209	TD0116	1S2075

SYMBOL NO.	STOCK NO.	DESCRIPTION		
[Capacitor]				
C201	CE0078	100μF	16WV	El
C202	CE0077	47μF	16WV	El
[Resistor]				
R201	RB0408	33K	1/8W	Rd
R202	RB0378	1.8K	1/8W	Rd
R203	RB0412	47K	1/8W	Rd
R204	RB0396	10K	1/8W	Rd
R205	RB0376	1.5K	1/8W	Rd
R206	RB0420	100K	1/8W	Rd
R207	RB0396	10K	1/8W	Rd
R208	RB0396	10K	1/8W	Rd

www.hifiengine.com

PB 1269 PARTS LIST

SYMBOL NO.	STOCK NO.	DESCRIPTION
[Switch]		
S1201 S1201	SS0013 SS0023	FM Antenna Muting
[Resistor]		

SYMBOL NO.	STOCK NO.	DESCRIPTION		
R1201	RB0342	56	1/8W	Rd
R1202	RB0332	22	1/8W	Rd
R1203	RB0342	56	1/8W	Rd
R1204	RB0348	100	1/8W	Rd
R1205	RB0410	39K	1/8W	Rd
R1206	RB0394	8.2K	1/8W	Rd
R1207	RB0400	15K	1/8W	Rd

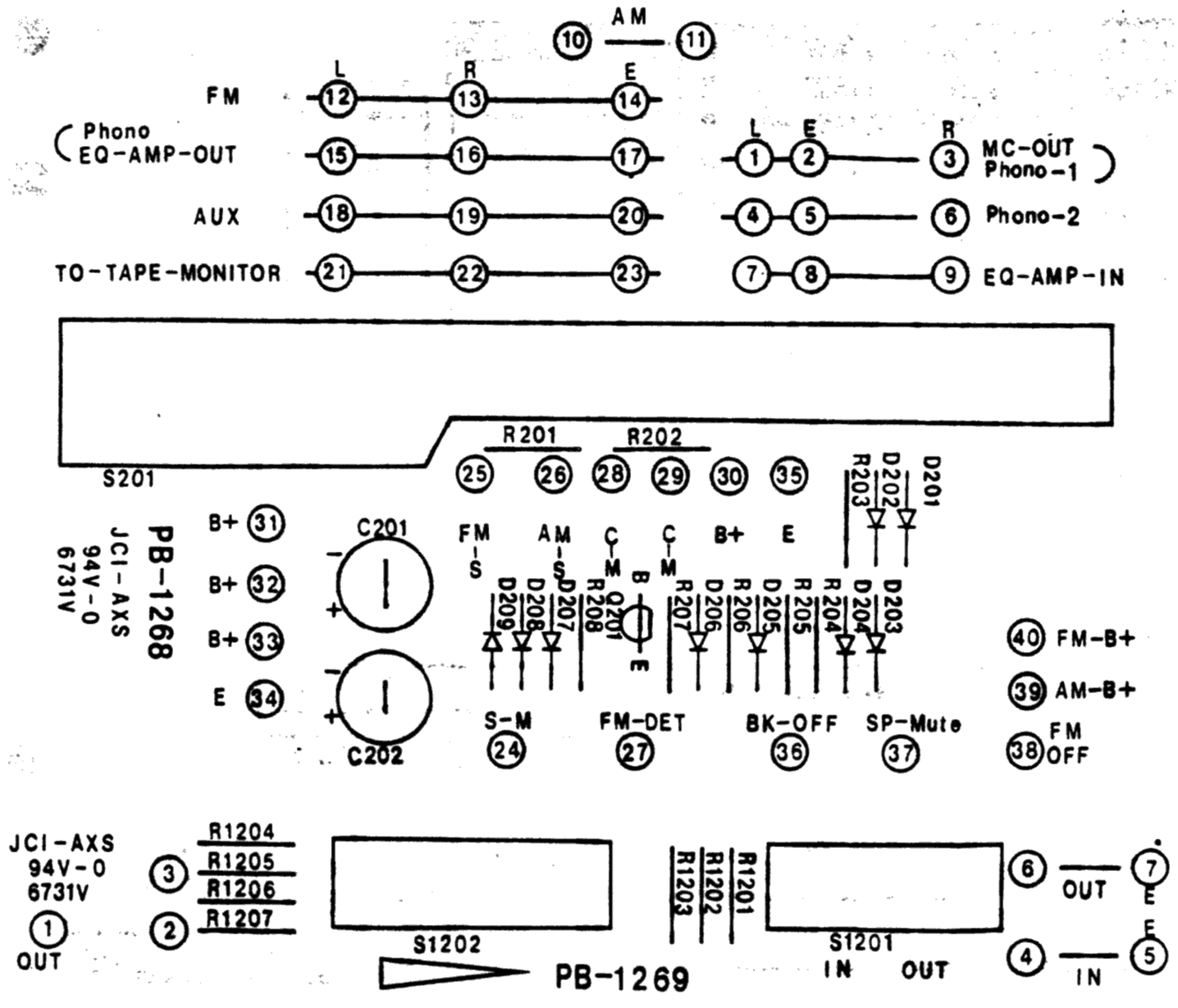

www.hifiengine.com

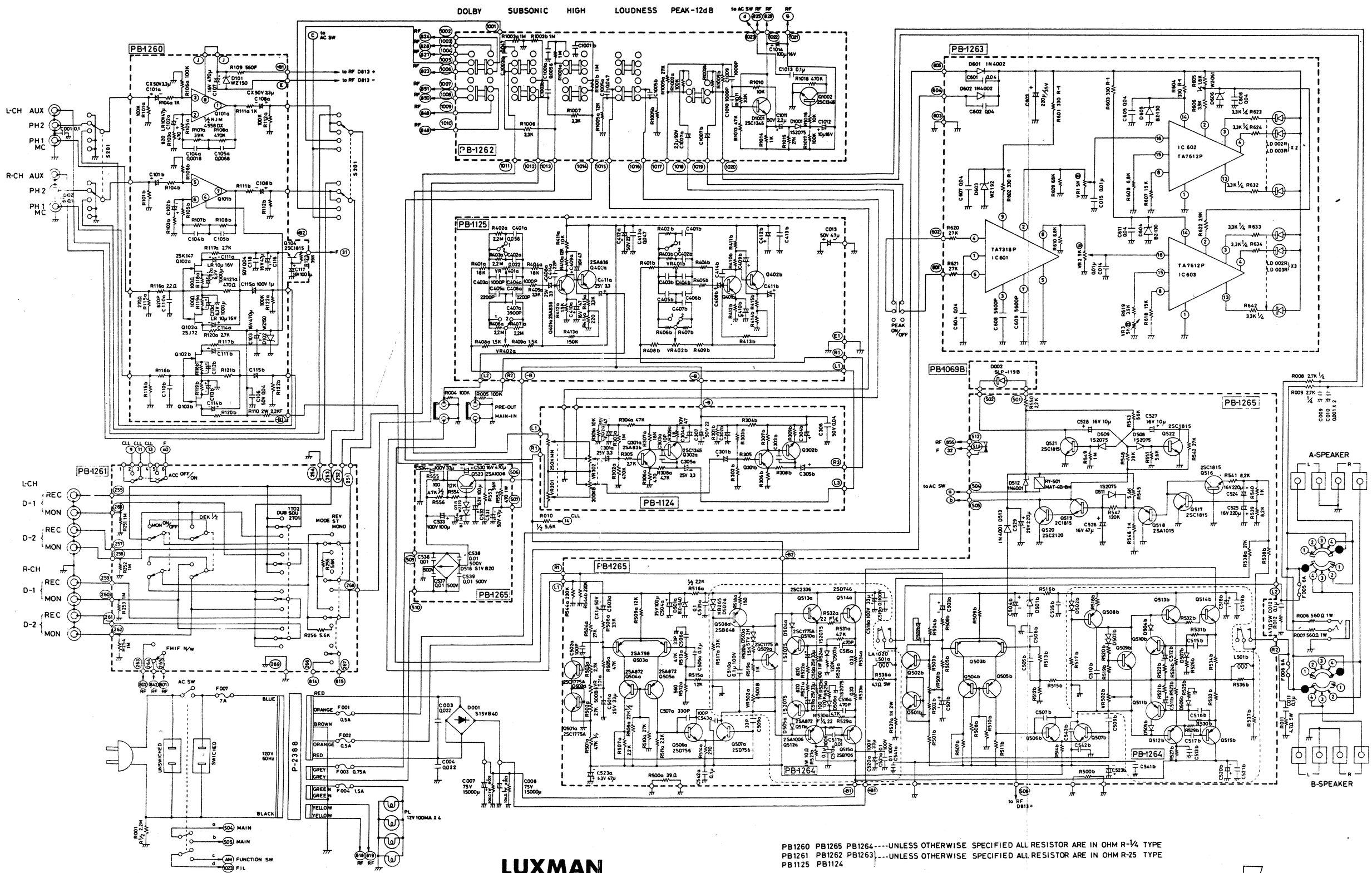

PB1260 PB1265 PB1264----UNLESS OTHERWISE SPECIFIED ALL RESISTOR ARE IN OHM R-¼ TYPE
PB1261 PB1262 PB1263}---UNLESS OTHERWISE SPECIFIED ALL RESISTOR ARE IN OHM R-25 TYPE
PB1125 PB1124

LUXMAN
R-1120A AF SECTION

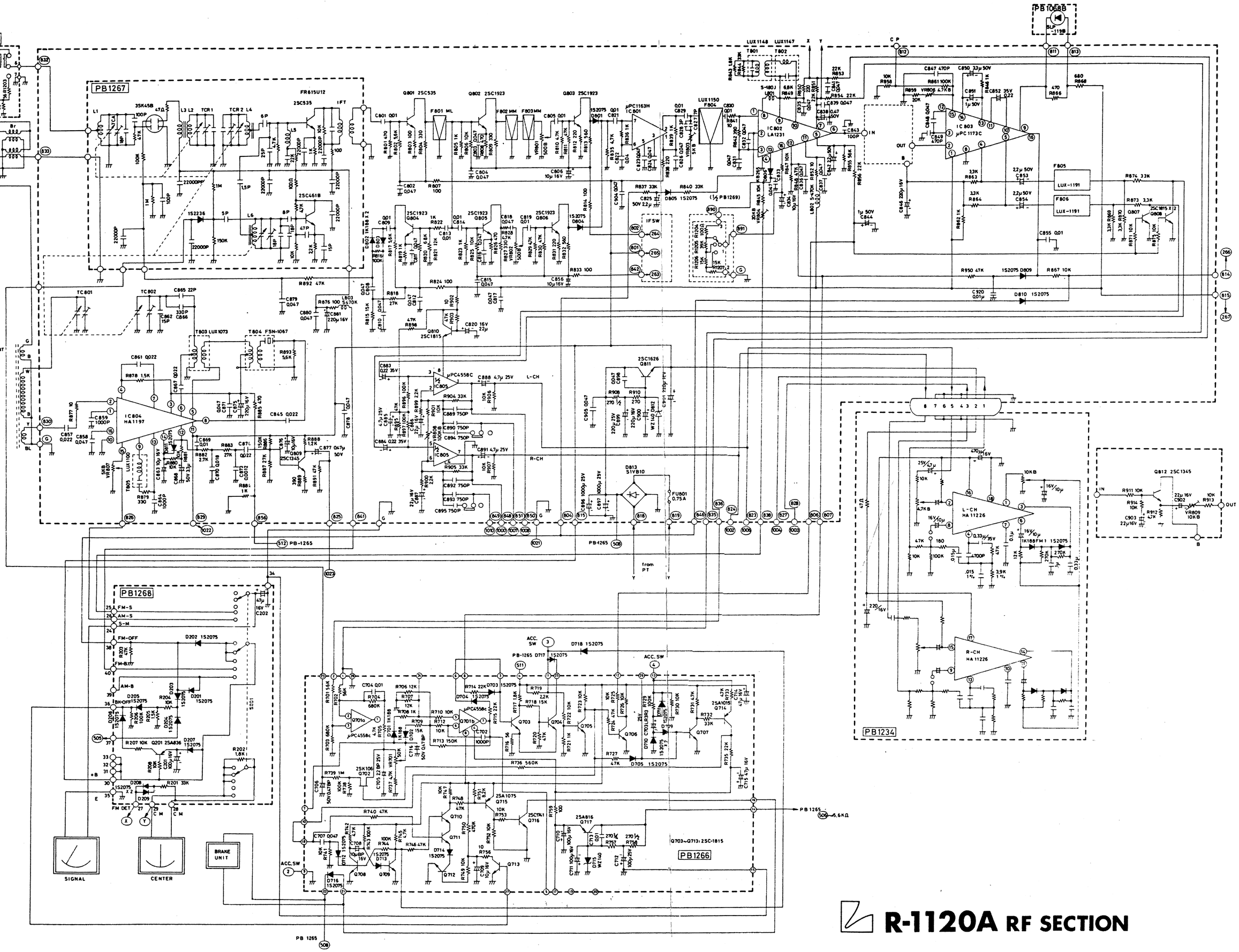

R-1120A RF SECTION

[SPECIFICATIONS]

AUDIO SECTION

Power Output	120 watts minimum continuous per channel both channels driven into 8 ohms load at any frequency from 20 Hz to 20,000 Hz with no more than 0.02% total hamonic distortion.
Rated I.M.	no more than 0.02% (8 ohms, 120 w ch. both ch driven, 60 Hz : 7 kHz = 4 : 1)
Frequency Response	15 Hz ~ 100 kHz (± 1 dB)
Input Sensitivity	0.18 mV (phono–1), 2.7 mV (phono–2) 180 mV (tuner, aux, moni.) 1.6 V (main in)
Phono Overload Voltage	160 mV (at 1 kHz)
Signal to Noise Ratio	86 dB (phono–2, IHF-A weighted, 10 mV) 100 dB (tuner, aux, monitor. IHF-A weighted)
Residual Noise	no more than 1.3 mV
Channel Separation	75 dB (aux, monitor) (at 1 kHz)
Tone Control	Treble 2 kHz (± 13 dB at 10 kHz) 4 kHz (± 8 dB at 10 kHz) Bass 200 Hz (± 6 dB at 100 Hz) 4 Hz (± 11 dB at 100 Hz) Subsonic 45 Hz (–6 dB/oct.) High Cut 7 kHz (–6 dB/oct.)
Loudness Control	± 8 dB at 100 Hz (VR: –30 dB)
Peak Indicator	+3, 0, –3, –6, –9, –12, –15, –18, –21, –24 dB

FM SECTION

50 dB Quieting Sensitivity	75 μsec. 14.2 dBf (2.8 μV), 50 μsec. 15.3 dBf (3.2 μV)	
IHF Usable Sensitivity	10.3 dBf (1.8 μV)	
Signal to Noise Ratio at 65 dBf	75 dB	
Frequency Response	30 Hz ~ 15 kHz (± 1 dB)	
Total Hamonic Distortion	(mono)	(stereo)
100 Hz	0.06% (wide)	0.15% (wide)
1kHz	0.06% (wide)	0.1% (wide)
6 kHz	0.12% (wide)	0.2% (wide)
1 kHz	0.2% (narrow)	0.5% (narrow)
Captute Ratio	0.9 dB (wide), 1.9 dB (narrow)	
Image Response Ratio	85 dB	
IF Response Ratio	90 dB	
AM Suppression Ratio	62 dB	
Stereo Separation	45 dB (wide, 100 Hz), 48 dB (wide, 1kHz) 40 dB (wide, 10 kHz), 30 dB (narrow, 1 kHz)	
Spurious Response Ratio	100 dB	
Adjacent Channel Selectivity	12 dB (narrow, ± 200 kHz)	
Altemate Channel Selectivity	80 dB (narrow, ± 400 kHz), 60 dB (narrow, ± 300 kHz), 48 dB (wide, ± 400 kHz)	
Subcarrier Product Ratio	65 dB	
SCA Rejection Ratio	60 dB	
Output Voltage	1 V	
Muting Threshold	500–50–10 μV (3-point)	

AM SECTION

IHF Usable Sensitivity	250 μV/m
Image Ratio at 1 MHz	50 dB
IF Rejection Ratio	40 dB (at 1 MHz)
Signal to Noise Ratio	50 dB

GENERAL

Power Consumption	500 W (at full power, 8-ohm), 120 V 5.5 A
Dimensions	490(W) x 430(D) x 170(H) mm (19-5/16" x 16-15/16" x 6.11/16")
Weight	Net 17.0 kgs (37.4 lbs.), Gross 19.0 kgs (41.8 lbs)

Specifications and oppearance design subject to change without notice.
Dolby is a trademark of Dolby Laboratories.

LUX CORPORATION, JAPAN

1-1, 1-CHOME, SHINSENRI-NISHIMACHI, TOYONAKA-SHI, OSAKA 565
PHONE: 06-834-0004 CABLE: LUXMAN TOYONAKA TELEX: J63694

www.hifiengine.com